PairGain Technologies HiGain Line Unit
MODEL HLU-231 Issue 1
List 3D, PairGain # 150-1111-34, CLEI Code: T1LIE044AA

CONTENTS **PAGE**

A. PRODUCT OVERVIEW **2**
1. DESCRIPTION AND FEATURES **2**
2. APPLICATIONS **2**
3. SPECIFICATIONS **2**
4. CERTIFICATION **3**
5. WARRANTY **3**
B. FUNCTIONAL DESCRIPTION **4**
6. OPERATIONAL CAPABILITIES **4**
7. POWER CONSUMPTION **6**
8. ALARM DESCRIPTION **8**
9. SYSTEM OPTION SETTINGS **9**
10. LOOPBACK DESIGN DESCRIPTION **13**
C. INSTALLATION, TEST AND MAINTENANCE **15**
11. INSTALLATION **15**
12. TEST PROCEDURES **16**
13. DESCRIPTION OF MAINTENANCE SCREENS **29**

CAUTION
This product incorporates static sensitive components. Proper electrostatic discharge procedures must be followed.

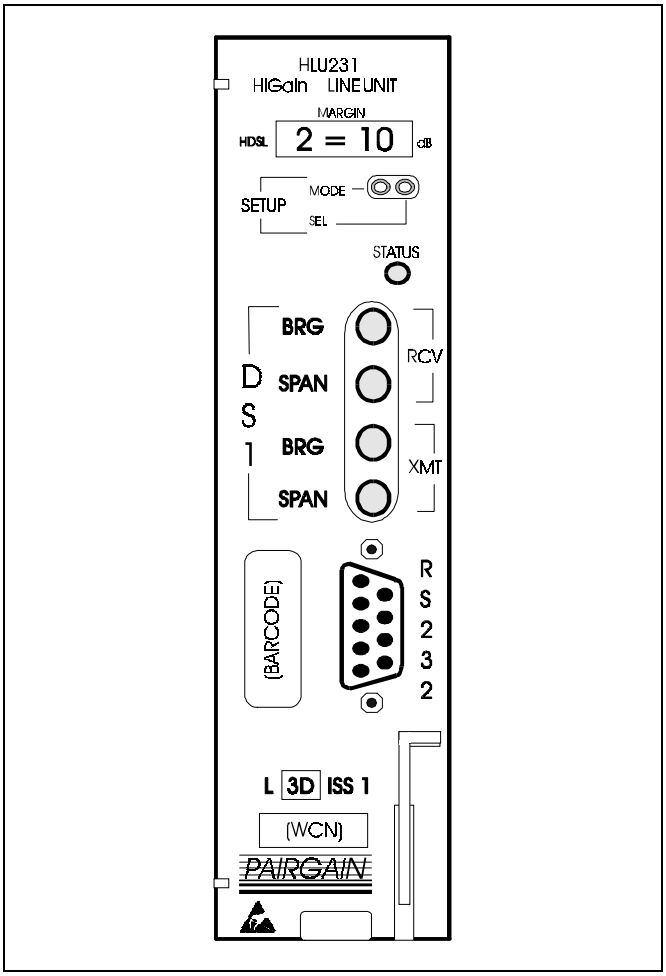

Figure 1. HLU-231 List3D Front Panel. The PairGain HLU-231 is the local unit used in conjunction with the HRU-412 remote unit to provide a complete HiGain HDSL system.

Copyright © 1995, PairGain Technologies, Inc. PairGain and HiGain are trademarks of PairGain Technologies.

A. PRODUCT OVERVIEW

1. DESCRIPTION AND FEATURES

1.01 PairGain's HiGain Line Unit Model HLU-231 Issue 1, List 3D (Figure 1) is the Central Office (CO) side of a repeater-less T-1 transmission system. When used in conjunction with an HRU-412 HiGain Remote Unit, the system provides 1.544 Mb/Sec transmission on two unconditioned copper pairs over the full Carrier Serving Area (CSA) range. The "D" designation in the list number indicates that this line unit can be used in applications with or without the HiGain Doubler unit (HDU-451).

The CSA includes loops up to 12000 feet of AWG 24 or 9000 feet of AWG 26 wire, including bridged taps. The HiGain system uses HDSL (High-bit-rate Digital Subscriber Line) transmission technology as recommended by Bellcore TA-TSY-001210. HiGain complies with TR-TSY-000063 (Network Equipment Building System NEBS) Generic Equipment requirements) and (TR-TSY-000499 (Transport System Generic Requirements - TSGR) common requirements.

1.02 Revision History of this practice.

Revision 01
February 10, 1995

a) Initial release.
b) The initial software release is v. 1.4.

1.03 HLU-231, List 3D features:

- Selectable DSX-1 Pre-equalizer
- V to -210 V self-adjusting line voltage for HRU-412 and HDU-451 applications
- Front Panel HDSL S/N Margin Display
- Selectable Loopback activation codes
- RS-232 maintenance port
- Non-volatile front-panel operator setup
- Front Panel DS1 splitting & bridging access
- Lightning and power cross protection on HDSL interfaces
- Kb/Sec full-duplex 2B1Q HDSL Transmission on two pairs
- Front panel status indicating LED
- Automatic front-panel display blanking
- DS1 LOS detector (125 consecutive zeros)
- Margin threshold alarm
- HAIS & SAIS options
- Easy return to factory default user settings
- New T-1 transceiver chip
- Circuit ID option

2. APPLICATIONS

2.01 HiGain provides a cost-effective, easy to deploy method for delivering T-1 High Capacity Digital Service (HCDS) over metallic pairs. The fiber-like quality service is deployed over two unconditioned, non-loaded copper pairs. Conventional in-line T-1 repeaters are not required. Cable pair conditioning, pair separation and bridged tap removal, are not required.

2.02 The general guidelines require that each loop have less than 35 dB of loss at 196 KHz, with 135 Ohm driving and terminating impedances. The HiGain system operates with any number of other T-1, POTS, Digital Data Service (DDS) or other HiGain Systems sharing the same cable binder group. HiGain systems can be used with customers requiring DS1 service on a temporary or permanent basis. HiGain also provides a means of quickly deploying service in advance of fiber-optic transmission systems. With HiGain, service can be provided within hours. Fiber optic systems can be installed at a leisurely pace and cut-over from HiGain when convenient to do so. The HiGain system can then be easily removed and utilized elsewhere.

3. SPECIFICATIONS

HDSL Line Code

784 Kb/Sec 2B1Q

HDSL Output

+13.5 dBm ± 0.5 dB @ 135 Ohms

HDSL Line Impedance

135 Ohms

Maximum Provisioning Loss

35 dB at 196 KHz, 135 Ohms

Line Clock Rate

Internal Stratum 4 clock

HDSL Startup Time

30 seconds typical, 60 seconds max per span

One-way DS1 Delay

<220 microseconds per span

DSX-1 Line Impedance

100 Ohms

DSX-1 Pulse Output

12 V_{pk-pk} for EXTERNAL equalizer or pre-equalized for 0-655 feet of ABAM-specification cable

DSX-1 Input Level

+1.5 to -7.5 dB DSX

DS1 Line Rate

1.544 Mbps ± 200 bps

DS1 Line Format

AMI, B8ZS or ZBTSI

DS1 Frame Format

ESF, SF or unframed

Maximum Power Consumption

18 Watts (without doubler), 25 Watts (with List 3, HDU-451 doubler)

Maximum Heat Dissipation

8 Watts (without doubler), 9 Watts (with List 3, HDU-451 doubler)

Fusing-Internal

Connected to "FUSE-ALARM" output on pin 32

Span Voltage

-130 to -210 VDC

Margin Indicator

Displays span SNR margin for both spans relative to 10^{-7} BER operation

Electrical Protection

Secondary surge protection on DS1 and HDSL ports. Power cross protection on HDSL ports.

Operating Temperature and Humidity

-40º to 65º Celsius, 5% to 95% relative humidity (non-condensing)

Mounting

AT&T 220-configuration or equivalent

Dimensions

Height:	5.9 in. (15 cm)
Width:	1.4 in. (3.5 cm)
Depth:	10 in. (25.4 cm)

4. CERTIFICATION

4.01 FCC compliance: The HLU-231 has been tested and found to comply with the limits for a Class A. digital devices. pursuant to Part 15 of the FCC rules. These limits are designed to provide reasonable protection against harmful interference when the equipment is operated in a commercial environment. This equipment generates, uses and can radiate radio frequency energy and, if not installed and used in accordance with the instruction manual, may cause harmful interference to radio communications. Operation of this equipment in a residential area is likely to cause harmful interference in which case the user will be required to correct the interference at his own expense.

5. WARRANTY

5.01 PairGain Technologies warrants this product to be free of defects and to be fully functional for a period of 24 months from the date of original shipment, given proper installation. PairGain will repair or replace any unit without cost during this period if the unit is found to be defective for any reason other than abuse or improper use or installation.

5.02 This module should not be field repaired. If it fails, replace it with another unit and return the faulty unit to PairGain for repair. Any modifications of the unit by anyone other than an authorized PairGain representative voids the warranty.

5.03 If a unit needs repair, call PairGain for a Return Material Authorization (RMA) number and return the defective unit, freight prepaid, along with a brief description of the problem, to:

PairGain Technologies, Inc.
14402 Franklin Avenue
Tustin, CA 92680
ATTN.: Repair and Return Dept.
(800) 638-0031

B. FUNCTIONAL DESCRIPTION

6. OPERATIONAL CAPABILITIES

6.01 HiGain utilizes PairGain's 2B1Q HDSL transceiver systems to establish two full-duplex 784 Kb/Sec data channels between the HLU-231 and a remotely mounted HRU-412 HiGain Remote Unit. This provides a total capacity of 1.568 Mb/Sec between the two units.

6.02 A block diagram of the HLU-231 is shown in Figure 2. The HiGain HLU-231 receives a 1.544 Mb/Sec DS1 data stream from the DSX-1 digital cross connect interface. The HLU contains a DS1 frame synchronizer controlled by an 8-bit microprocessor that determines the type of framing on the DS1 stream and synchronizes to it. The HLU-231 recognizes Superframe (SF) (including D4) or Extended Superframe (ESF) framing. When the data is unframed, the HLU-231 arbitrarily defines a frame bit.

6.03 The HLU-231 contains a demultiplexer that generates two parallel 784 Kb/Sec data streams. The data streams contain HDSL frames that are nominally 4704 bits (6 milliseconds) in length. The HDSL frames contain a 14 bit Frame Sync Word (FSW), 6 bit Cyclic Redundancy Check (CRC), 21 bit operations channel and DS1 payload. The DS1 stream is separated into two parallel streams that comprise the payloads of the HDSL channels. HDSL channel 1 contains the DS1 time slots 1 thru 12. HDSL channel 2 contains the DS1 time slots 13 thru 24 The 8 Kb/Sec frame bits of the DS1 stream are included on both HDSL channels.

6.04 The two formatted HDSL channels are passed to the HDSL transceivers which convert them to 2B1Q format on the HDSL lines. The 2B1Q line code is designed to operate in a full-duplex mode on unconditioned pairs. The transceiver's echo canceler and adaptive equalizer receive the signal from the remote end in the presence of impairments and noise on the copper pairs.

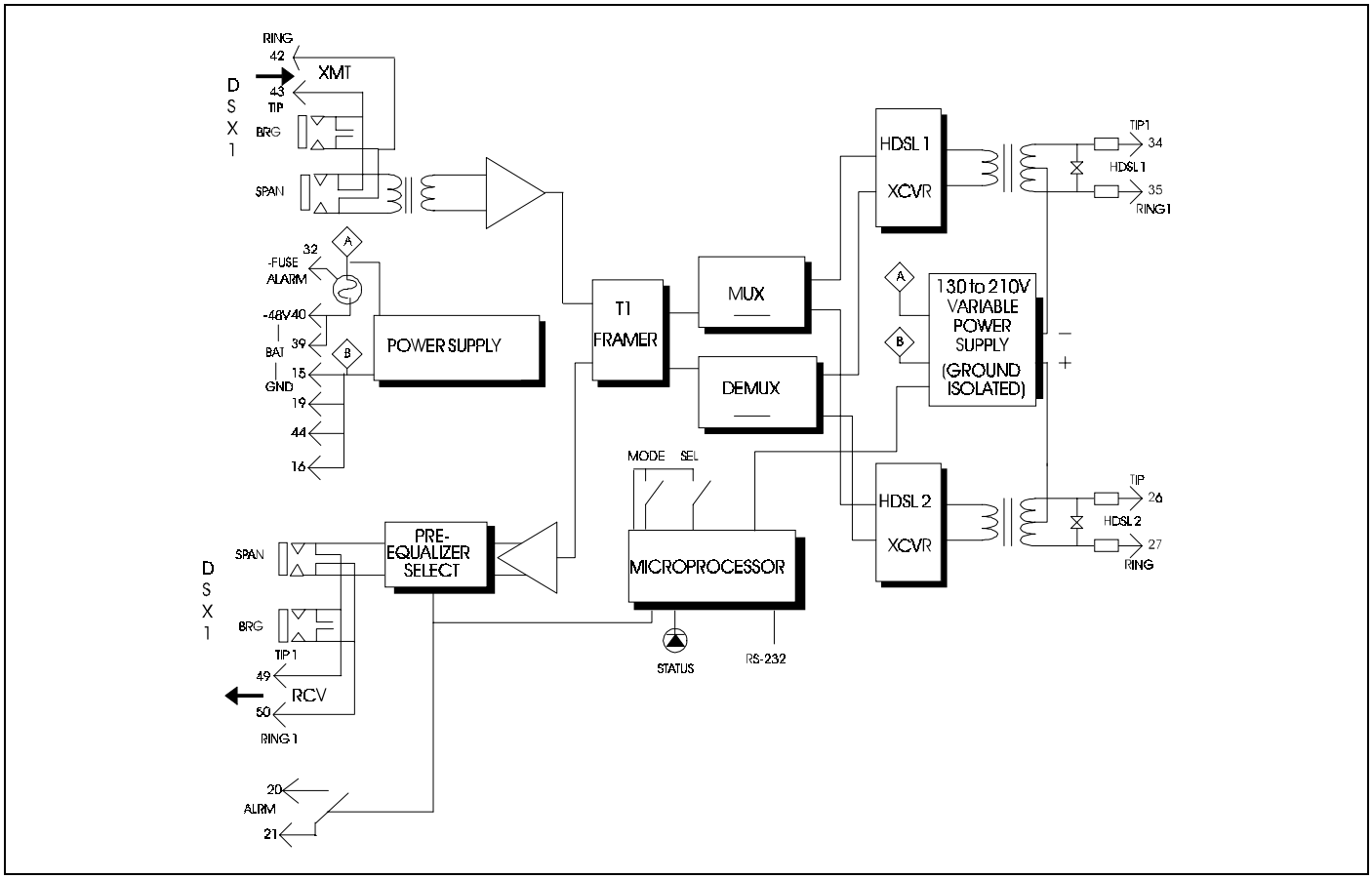

Figure 2. HLU-231 List 3D Block Diagram. PairGain's HDSL technology provides full-duplex services at standard T-1 rates over copper wires between an HLU and an HRU, which comprise one HiGain system.

6.05 The received HDSL channels are processed by the transceiver and then passed on to the HLU-231 multiplexer module. The multiplexer provides frame synchronization for each of the two HDSL channels. The multiplexer and HDSL transceivers work under control of the HLU-231 microprocessor and compensate for data inversions caused by tip-ring reversals and for channel swaps caused by pair reversals. The HiGain system allows for tip-ring or pair reversals, but does not tolerate split pairs. By synchronizing to the FSW of each channel, the multiplexer can reconstruct the original 1.544 Mb/Sec DS1 stream from the payloads of the two HDSL channels. The CRC fields on the HDSL streams allow the HLU-231 to determine if errors are present on the channel due to excessive impairments on the HDSL pairs, or due to excessive impulse or crosstalk noise.

6.06 The multiplexer removes data link messages from the HDSL channels and pass them to the microprocessor. This mechanism allows operations messages and status to be exchanged between the HLU-231 and the HRU-412 remote unit.

6.07 The reconstructed HDSL data channel is buffered in a first-in-first-out buffer (FIFO) within the multiplexer. A frequency synthesizer in conjunction with the FIFO regulates the output bit rate and reconstructs the DS1 clock at the exact rate received from the remote end. The HiGain system operates at DS1 rates of 1.544 Mb/Sec with up to ±200 bits/Sec of offset.

6.08 A DSX-1 interface driver converts the DS1 channel to an AMI or B8ZS format. The DSX-1 equalizer is programmable to five different lengths as determined by the distance between the HLU and the DSX-1 interface. This provides CB-119 compliant pulses at the DSX-1 interface over a range of 0-655 feet of ABAM-specification cable.

6.09 The HLU-231 contains two separate power converters. The main power supply converts -48 VDC local battery to logic power for the HLU-231 circuits. The line power supply converts the -48 VDC battery to a variable -130 VDC to -210 VDC feed that provides simplex power feed on the two HDSL line interfaces. The output voltage adjusts itself as a function of the demands made on it by short loops without doublers (low voltage) or long loops with doublers (high voltage). The line power supply can be turned on or off by the microprocessor and is automatically shut down in the presence of line short circuits or microprocessor failure.

6.10 A 9-pin (RS-232) DB-9 connector is provided on the front panel (see Figure 3). This connector provides access to HiGain's maintenance, provisioning and performance monitoring interface. A very basic interface is available via a 'dumb terminal'. Figures 6 through 30 show the menu selections that are available from the terminal. Tables 11 and 12 define the various terms used in the screen displays. The port is configured as DCE with 8 data bits, 1 stop bit and no parity. Striking the SPACE bar several times enables the HLU-231 to automatically match the terminal line baud rate, from 1200 to 9600 baud.

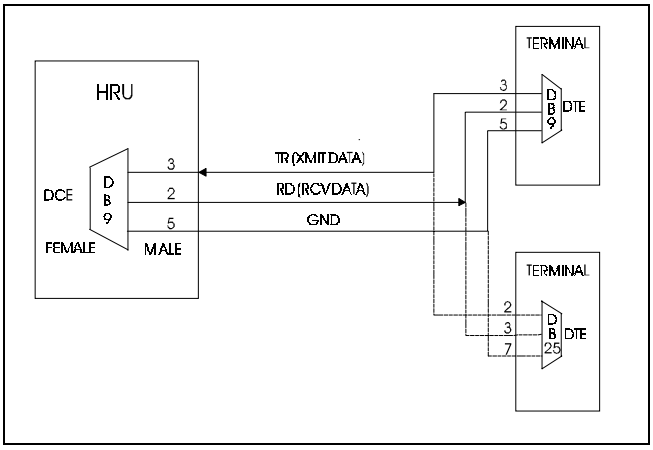

Figure 3. HLU-231 List 3D DB-9 Pin-Outs. A standard RS-232 (DB-9) connector on the front panel provides access to the menu interface feature via a dumb terminal.

7. POWER CONSUMPTION

7.01 The Maximum Current drain is the current drawn from the shelf power supply when it is at minimum voltage (42.5 VDC) under a worst case application. *The doublers mentioned throughout this practice refer to the HDU-451, List 3, part# 150-1143-03, low power unit.* The worst case application for the HLU-231, List 3D occurs on a loop with one doubler, four 9000 foot, # 26 AWG spans, and an HRU that is providing 60 mA of CPE current. Under these conditions the HLU current drain from the 42.5 VDC battery is 0.58 Amps. This CO current and other related power parameters for this doubler application are listed in Table 1. The worst case current drain for a non-doubler application is 0.43 Amps.

7.02 The maximum shelf current drain allowed is a function of the shelf's 48 VDC fuse. Table 2 lists the doubler shelf deployment guidelines, as a function of the shelf fuse, for the more popular Type 220 mechanical configuration shelves. These guidelines limit the maximum fuse load to 85% of shelf rated capacity. Use Table 2 when selecting the appropriate load fuses for the Building Distribution Fuse Bus (BDFB) when deploying HiGain equipment in COs. **CAUTION: The HLU-231's minor ALM option must be set to DIS (disabled) when using the Kentrox 23" T-TERM 220 shelf. The alarm relay contancts on pins 20 & 21 (see Figure 4) are in conflict with the T-TERMs DSX-1 equalizer outputs which also appear on pins 20 & 21.**

7.03 The maximum HLU-231 power dissipation is the power that is converted into heat within the unit. It contributes to the total heat generated and is used to determine the maximum number of shelves per bay that do not exceed the maximum power dissipation density in Watts/sq. ft.

7.04 In CO locations, the maximum power dissipation for open faced, natural convection cooled mountings is 120 W/sq. ft. as stated in NEBS standard TR-NWT-000063 section 4.2.3. The footprint of a 13 slot 23" SXSS shelf is 7.024 sq. ft. Thus the maximum allowable dissipation is 840 Watts. For an SXSS shelf with 10 slots occupied, the maximum power dissipation is 350 (10 x 35) Watts. This limits the number of fully loaded shelves to 2.4 per bay. Note that this is a worst case situation since it assumes the entire CO is subjected to the maximum power density. More favorable conditions would permit increasing the number of shelves per bay without jeopardizing the CO thermal integrity.

7.05 The thermal loading limitations imposed when using the HLU-231 in CEVs or other enclosures are determined by applying the HLU-231 power parameters to the manufacturer's requirements for each specific housing.

7.06 The Power Consumption listed in Table 1 is the total power that the HLU-231 consumes or draws from its -48 VDC shelf power source. This parameter is needed when the 231 is located remote to its serving CO. It determines the battery capacity required to maintain an 8-hour stand-by battery reserve for emergency situations. It thus limits the maximum number of plugs per remote enclosure. Use this data to perform this analysis on a case by case basis.

TABLE 1. POWER PARAMETERS FOR HLU-231, LIST 3D WITH DOUBLER

60 mA CPE (Current)	*CO Voltage (Volts)*	*CO Current (Amps)*	*Power Consumption (Watts)*	*HLU Power Dissipation (Watts)*
OFF	42.5	0.50	22	8.25
OFF	48	0.41	22	8.25
OFF	56	0.38	22	8.25
ON	42.5	0.58	25	9.0
ON	48	0.52	25	9.0
ON	56	0.43	25	9.0

TABLE 2. DEPLOYMENT GUIDELINES FOR HLU-231, LIST 3D WITH DOUBLER

Shelf Type	*Shelf Fuse (Amps)*	*Max # of Doubler Systems per shelf (60 mA CPE I ON)*	*Max # of Doubler Systems per shelf (60 mA CPE I OFF)*
-48V New Bays (J98725P,J98725P,J98725P)	20	13	13
SXSS (CO) (J98725CA)	10	13	13
Original 220 Bays (J98725A,B,C,D,E&F)	3.43	5	6
Upgraded 220 Bays (J98725A,B,C,D,E&F)	20	13	13
SXSS (80 D Cabinet)	5	7	8
Kentrox T-Term 220	10	13	13
PairGain HCS-417	20	14	14

8. ALARM DESCRIPTION

8.01 The normally open alarm contacts available across pins 20 & 21 comprise the HLU-231's Minor Alarm output. These alarm contacts close for any of the following alarm conditions. Note that the front panel message which accompanies each alarm condition is shown in bold letters before each alarm condition. Since more than one alarm condition can exist at any given time but only one message can be displayed, the alarms are listed in their order of priorities. Only the highest priority alarm is displayed if more than one alarm condition exists.

1) ALRM LOSW: Either HDSL loop loses sync.
2) ALRM LLOS: Loss of the HLU DS1 input signal.
3) ALRM RLOS: Loss of HRU DS1 input signal.
4) ALRM H1ES: HDSL Loop 1 has exceeded the 24 hour user-selected Errored-Seconds Cyclic Redundancy Check (CRC) threshold.
5) ALRM H2ES: HDSL Loop 2 has exceeded the 24 hour user-selected Errored-Seconds CRC threshold.
6) ALRM DS1: The total number of bipolar violations (BPV) at the HLU and HRU T-1 input have exceeded the 24-hour user-selected threshold.
7) ALM MAL1(2): The margin on HDSL Loop 1 or Loop 2 has drooped below the minimum threshold value set by the dumb terminal MARGIN ALARM THRES; as described in Section 9.

8.02 The HLU 231's STATUS LED flashes RED for the duration of a minor alarm condition. Alarms 4, 5 & 6 can be inhibited by selecting NONE for the Errored Seconds Alarm (ESAL) system option. See Section 9 for System Settings information. The MAL(X) alarm can be disabled by setting the margin alarm threshold to 0. The MNALRM can be retired by executing the Alarm Cut Off (ACO) option. This is accomplished by pressing the SEL button on the front panel. This turns the alarm off and replaces the ALRM message by the ACO message. The second part of the ALRM message, which defines the cause of the alarm, remains. Both messages remain until the alarm condition clears or another alarm occurs.

8.03 Note that when both HDSL loops lose sync word (LOSW), a minor alarm condition exists but because the HLU enters a self test cycling mode, the front panel LED lights yellow instead of red and the SELF TEST message is displayed instead of the ALRM message.

8.04 Setting the ALM option to DIS only prevents the alarm relay from operating on a minor alarm event. The STATUS LED still flashes red and the ALRM message is still displayed. See paragraph 7.02.

8.05 Pin 32, FUSEALARM, is driven to -48 V and the front panel STATUS LED turns red whenever the on board fuse opens.

8.06 The HLU-231's front panel tri-color STATUS LED has the following states:

GREEN - Normal Operation

FLASHING GREEN - HDSL Acquisition

FLASHING RED - Minor Alarm (For conditions see Paragraph 8.01)

RED - FUSEALRM

YELLOW - Self Test in process or an HLU loopback in effect (CREM or NLOC).

FLASHING YELLOW - The HLU is in an ARMED state.

9. SYSTEM OPTION SETTINGS

9.01 The HLU-231 contains a non-volatile RAM which stores the system option settings. No dip-switches or jumpers are required to set the HLU-231 configuration. The options are set via pushbuttons on the front panel or through the RS-232 interface. The options are retained if shelf power is lost or if the HLU-231 is unplugged. Table 3 lists the HLU-231 option settings. Note that only those options enclosed by quotes can be set by the front panel buttons. All 14 options can be set via the RS-232 port. Figure 13 illustrates the set-up menu used to set these options from the RS-232 port. The settings shown in the second column of Figure 13 represent the factory default settings. The third column values (in parenthesis) indicate the other parameter options.

9.02 The SETUP (MODE and SEL) momentary pushbuttons are used to set the four options shown in quotes in Table 3 from the front panel. To initiate an OPTION SETTING mode, press the MODE button for one second and release. The message displayed on the front panel alternates between the system parameter and its current setting. Pressing the SEL button steps the display through all possible settings (one at a time) of the MODE (parameter) being displayed. After the desired setting has been chosen, press MODE. This does two things. First it updates the current displayed mode to the setting chosen. It then selects the next configurable parameter. After the last parameter has been selected, the displays shows CONF/NO. If the MODE button is now pressed, none of the changed parameters are installed. If the SEL button is pressed, a YES message is displayed and the chosen changes are installed. In either case the display returns to its normal mode. The display also returns to its normal mode, without installing any new changes, if neither button is pressed for 30 seconds.

9.03 All 14 user options can be set to their default values by pressing the SEL button for six seconds. When released, the message: ”DFLT NO” appears. To install the default values press the SEL button again. The “YES” will follow indicating that the default values are now in effect. To terminate this DFLT mode without reverting the options to their default values, press the MODE button or do nothing for 30 seconds. The latter returns the display to its normal state.

9.04 Pressing the MODE button for three or more seconds causes the display to scroll through the HLU software version number, its List # and the type of frame pattern being received from the DSX-1, if the FRMG option is set to AUTO. If FRMG is set to UNFR, it displays UNFR. See Table 10 for these additional messages. The line code parameter mimics the line code setting LNCD: AMI or B8ZS.

9.05 The CIRCUIT ID option is set by choosing the “H” option from the dumb terminal main menu shown in Figure 6. The message “enter circuit ID #: 24 characters max” follows the “H” selection. Press the RETURN key after entering the chosen set of alpha-numeric ID characters; choose “C” to confirm. Note if more than 24 characters are entered, a “Beep” is emitted and only the first 24 characters are accepted. The ID appears in all HLU screens as shown in Figures 6 through 30. The ID does not appear on the HRU screens when the maintenance port is accessed at the remote unit. Note that the Circuit ID is not set to its default (all blanks) setting when the DFLT setting option is utilized.

9.06 To set the DS0 BLOCKING option first select the SYSTEMS SETTINGS (“C” choice) from the main menu. The menu shown in Figure 13 appears. Enter the letter “B” shown in parenthesis of the DS0 blocking selection. The DS0 channels are blocked or unblocked by entering each channel’s number. Multiple channels can be selected by inserting a space between each entry. After all the new settings have been made, enter “E” for exit and then “C” for confirm. The new choices are now installed. If DS0 blocking is invoked in a HiGain system that has an earlier version HRU that does not support the blocking option, blocking will only occur at the DS1 output of the HLU. The HRU DS1 output will not be blocked. Also, all blocked channels are opened for all HiGain loopback tests. This allows the standard full bandwidth T-1 loopback tests to be performed.

9.07 To set the MARGIN ALARM THRESHOLD select “G” from the system settings menu. Enter the desired minimum acceptable alarm threshold from the 0 to 15 dB range. This causes a minor alarm to occur if either the margin on HDSL loop 1 (MAL1) or loop 2 (MAL2) drops <u>below</u> the selected threshold value. Since the margin can never drop below 0, choosing “0” for the margin threshold turns the margin alarm off.

9.08 The other dumb terminal system settings are set in a similar manner. Enter the letter in parenthesis of the parameter to be changed. Each entry of this letter scrolls the parameter to its next value. Press the ENTER key after each selection is made. After all selections have been made, enter “E” and then “C” to the resulting Confirm message. This activates the new choices and returns control to the main menu.

9.09 The new T-1 transceiver chip in both List 6 units allows each unit to process both B8ZS and AMI code inputs, regardless of the DS1 code setting (AMI or B8ZS). Earlier units caused input BPVs if B8ZS patterns were processed while in AMI mode. When the newer units are in AMI mode, they can receive B8ZS but can only transmit AMI. For this reason, mixed systems (those consisting of both List 6 and older List 1, 2, 3, 3A & 4) units will respond differently in each direction for B8ZS inputs when in their AMI mode.

9.10 The SELF-TEST mode that occurs when both HDSL loops are not in sync has been enhanced to include the input DS1 transceiver chip in the self test procedure. This process can cause the AIS pattern, that is normally transmitted from the HLU during these out of sync intervals, to exhibit occasional BPVs.

9.11 The HAIS option provides two choices for the T-1 transmit outputs at both the HLU & HRU for HDSL loss of sync conditions. The “1LP” choice causes the AIS pattern to be transmitted at both T-1 outputs when either of the two HDSL loops experience an out of sync (LOSW) condition or when a margin alarm occurs. This choice causes the 12 channels on the surviving loop to be lost as they are replaced by the AIS pattern. However it does allow both down & upstream equipment to be made aware of the loss of one HDSL loop or a loop with low margin. This is the preferred setting to be able to initiate an AIS state with just one conductor open in either of the HDSL pairs. Short loops, below about 16 dB of loss at 200 KHz, can remain in sync with one conductor open. Since the loop is still in sync, no LOSW condition occurs. However, the margin on a one conductor loop drops about 5 to 10 dB. Thus if the Margin alarm is set to 5 dB below the normal margin at turn-up, then when one conductor does open, a minor alarm occurs and causes the AIS condition. This alerts the maintenance personnel of the problem. The “2LP” choice requires both HDSL loops to be out of sync (LOSW) before the AIS signal is transmitted. This choice preserves the integrity of the 12 surviving channels when just one loop is lost.

9.12 All user options that affect the operation in both the HLU & HRU, such as HAIS, SAIS & DS0 blocking, will not be available in older versions of the HRU that do not support these newer options.

9.13 Note that the PairGain HCS-417 & 418 shelves and some 220-configuration shelves deployed in remote cabinets do not have external equalizers. The EXT EQL option may not be used in these applications.

TABLE 3. SYSTEM OPTION SETTINGS

Mode	***Selection***	***Description***
"EQL"	EXT*	Replaces the internal equalizer with a 12 Vp/p driver for external equalizers.
	0	Sets Equalizer to DSX-1 for 0-133 feet.
	133	Sets Equalizer to DSX-1 for 133-266 feet.
	266	Sets Equalizer to DSX-1 for 266-399 feet.
	399	Sets Equalizer to DSX-1 for 399-533 feet.
	533	Sets Equalizer to DSX-1 for 533-655 feet.
LPBK	DIS	Configures HiGain to ignore all in-band "smart-jack" loopback commands.
	ENA*	Enables HiGain to recognize all in-band "smart-jack" loopback commands.
SPLB	GNLB	Configures HiGain to respond to the generic 3/4 in 7 and 5/6 in 7 in-band loopback codes.
	A1LB&A2LB*	Configures HiGain to respond to the Teltrend addressable repeater in-band loopback codes.
	A3LB	Configures HiGain to respond to the Wescom addressable repeater in-band loopback codes.
	A4LB	Configures HiGain to respond to the Wescom Mod 1 addressable repeater in-band loopback codes.
	A5LB	Configures HiGain to respond to the Teltrend Mod 1 addressable repeater in-band loopback codes.
PWRF	DIS	Disables powering to the HRU over the HDSL pairs.
	ENA*	Enables powering to the HRU over the HDSL pairs.
ZBTS	ON	Tells HiGain that the ESF frame is operating in its ZBTSI mode.
	OFF*	Tells HiGain the ESF frame is operating in its normal non-ZBTSI mode.
ESAL	17	Activates (grounds) the Minor Alarm (MNRALM) relay output contacts on pins 20 & 21 and turns the STATUS LED to flashing red when 17 Errored Seconds (ES) (17 HDSL CRC errors on either HDSL loop or a total of 17 BPV"s and FERR) occur within a 24-hour period.
	170	Activates (grounds) the Minor Alarm (MNRALM) relay output contacts on pins 20 & 21 and turns the STATUS LED to flashing red when 170 Errored Seconds (ES) (170 HDSL CRC errors on either HDSL loop or a total of 170 BPVís and FERR) occur within a 24-hour period.
	NONE*	Prevents generation of a minor alarm due to excessive Errored Seconds.
"LBTO"	NONE	Disables automatic time-out cancellation of all loopbacks.
	20	Sets automatic cancellation of all loopbacks to 20 minutes after initiation.
	60	Sets automatic cancellation of all loopback to 60 minutes after initiation.
	120*	Sets automatic cancellation of all loopback to 120 minutes after initiation.
ALM	DIS*	Opens the alarm relay contacts, if closed, and prevents another relay alarm closure from occurring.
	ENA	Enables activation of the minor alarm relay when a minor alarm condition occurs.

Table continued on next page

TABLE 3. SYSTEM OPTION SETTINGS (CONTINUED)

Mode	***Selection***	***Description***
"LNCD"	B8ZS	Places both the HLU & HRU into their B8ZS modes.
	AMI*	Places both the HLU & HRU into their AMI modes.
"FRMG"	AUTO	Configures HiGain to operate in an auto-framing (AUTO) mode in which it continuously searches the input T1 bit stream for a valid SF or ESF frame pattern. This feature is required for fractional T1 applications (DS0 blocking) where it insures proper channel time slot alignment. While HiGain can also process unframed data in this AUTO mode, it is recommended that the UNFR mode be used for all unframed applications. Using the AUTO mode for unframed applications runs the risk of detecting "pseudo valid" frame sequences, which can affect the data integrity.
	UNFR*	Configures HiGain to operate in an unframed mode. This mode disables the auto framing process and forces HiGain to function as a transparent bit pipe.
HAIS	2LP*	Causes HiGain to transmit the AIS signal at both the HLU & HRU T1 output ports when **both** of the HDSL loops are not in sync (LOSW).
	1LP	Causes HiGain to transmit the AIS signal at both the HLU & HRU T1 output ports when **either** of the two HDSL loops is not in sync (LOSW) or if a margin alarm occurs.
SAIS	ENA*	Causes the List 6 and 7 HRU to transmit the AIS signal towards the NI when in NREM or SMJK loopback.
	DIS	Causes the List 6 HRU to transmit the signal from the network towards the NI and the List 7 to open and terminate its NI when in its NREM or SMJK loopback states. The AIS signal is turned off.
CONF	YES	Confirms that all nine operating modes are to be updated to their current choices.
	NO*	Prevents the most recently selected operating mode choices form being updated. They remain as they were before the system option settings procedure was entered.
MARgin Alrm Trsh	0 to 15 dB (4*)	The Margin Alarm Threshold can only be set via the RS-232 maintenance port. It determines the minimum allowable margin below which a minor alarm will occur.
DS0	BLK/NONE*	The DS0 blocking option can only be set via the RS-232 maintenance port with a dumb terminal. See Figure 13. The 4-character HLU front panel only displays the status of the blocking option. NONE indicates no channels are blocked. BLK indicates at least one channel is blocked
"xxxx"	Panel Set	Only these options can be set from the front panel buttons. All of the options can only be set from the RS-232 maintenance port.

* Indicates HLU-231 factory settings. HiGain can be set to these default settings by pressing the SEL button for 6 seconds and then selecting the YES response to the resulting DFLT message.

10. LOOPBACK DESIGN DESCRIPTION

10.01 The HiGain family of loopbacks is shown in Figure 4. The most important of these is the Smart Jack loopback. It is enabled by the LPBK user option. It configures the HRU-412 to respond to the standard NIU 2/3 in 5 in-band loopback codes. It should be enabled when the HRU is used to replace an external NIU.

10.02 In addition to the SmartJack loopback, HiGain can be configured for one of five special in-band loopback command sequences. These are selected from the SPLB user option shown in Figure 14.

10.03 GNLB is the HiGain Generic loopback code. The GNLB allows in-band codes from the network to loop-up either the HLU/NLOC (4 in 7) or HRU/ NREM (3 in 7) towards the network. In addition, it allows in-band codes from the Network Interface (NI) to loop-up the HLU/ CREM (6 in 7) or HRU/CLOC (5 in 7) towards the customer. For doubler applications it permits looping doubler 1 towards the network NDU1 (2 in 6) or towards the customer CDU1 (4 in 6). Doubler 2 is looped towards the network with NDU2 (3 in 6) or towards the customer CDU2 (5 in 6). Either loop-up condition is terminated (looped-down) with the 3 in 5 loop-down code. All messages must be present for five seconds before HiGain responds. Table 4 lists the test procedures that apply when using the GNLB mode.

10.04 The A1LB loopback selection (Table 5) complies with that proposed for HDSL systems in the T-1/E-1.4/92 recommendation with the following additions:

1) Query loopback
2) IOR powerdown
3) Three loopback time-out choices
4) Initiation from either end
5) Repeating bit error signatures
6) Alternate Query loopback

These additions make A1LB identical to A2LB described below. It is given a separate identity to allow future T-1/E-1 enhancements to be added without affecting A2LB.

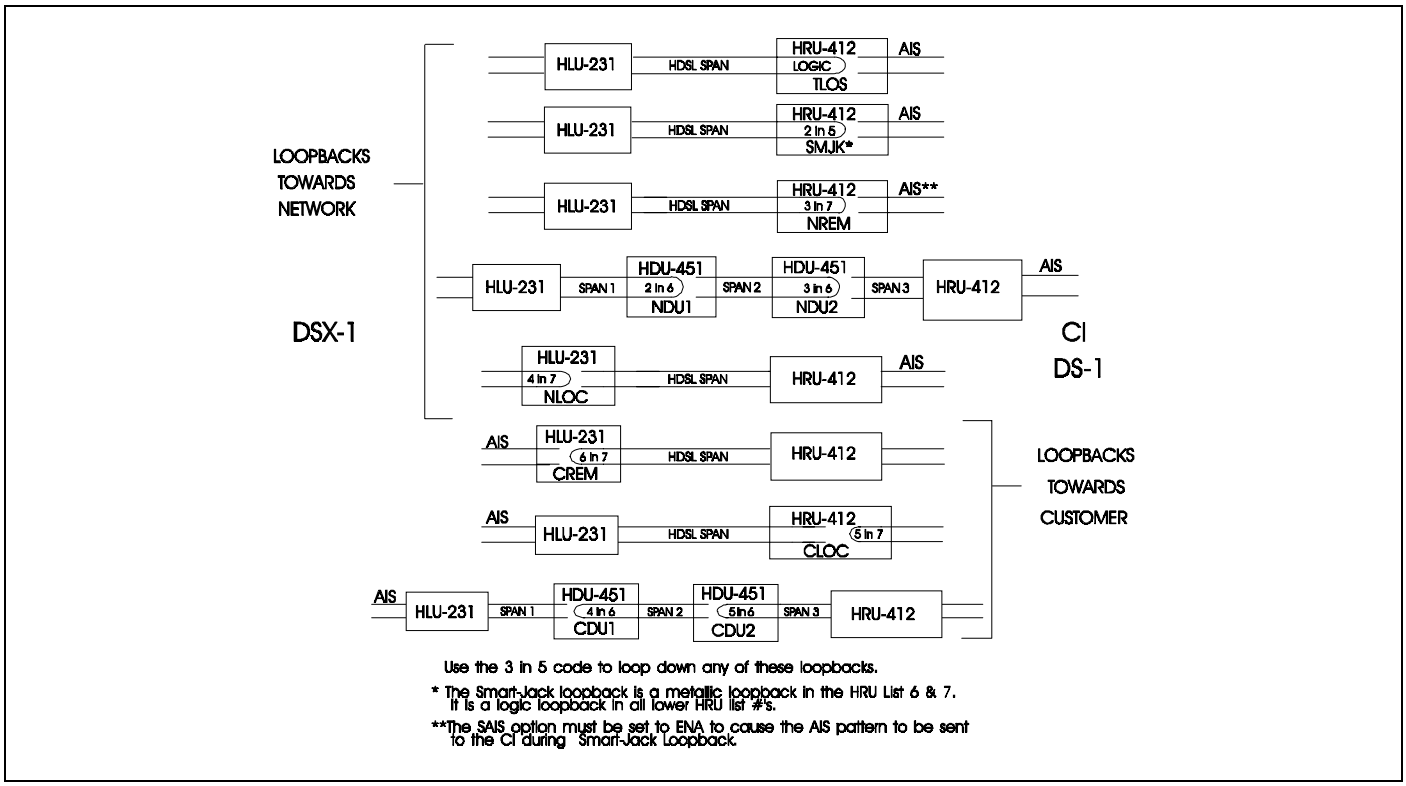

Figure 4. HLU-231, List 3D Loopback Configurations. The most important of the HiGain family of loopback options is the Smart-Jack loopback, which emulates the functions of a standard NID.

10.05 A2LB through A5LB are four special addressable repeater loopback functions which are supported by the List 6 version of HiGain. These loopbacks provide HiGain with sophisticated maintenance and trouble shooting tools. Tables 6 thru 9 list the details of these Special Loopback (SPLB) functions. A2LB & A5LB are patterned after the Teltrend addressable T-1 repeater loopbacks. A3LB & A4LB are patterned after the Wescom addressable T-1 repeater loopbacks. All four SPLBs have been enhanced to handle the specific requirements of the following HiGain customers:

A2LB (Teltrend) = Southwestern Bell (default setting)

A3LB (Wescom)=New England Tel.

A4LB (Wescom Mod 1) =New York Tel.

A5LB (Teltrend Mod 1) =Southern New England Tel. (SNET)

10.06 A5LB differs from A2LB in that A5LB does not block the arming code from exiting the HLU into the network. A2LB can be configured to either block this arming code after 2 seconds, and replace it with the AIS code, or to unblock it by executing the FAR-END ACTIVATE code. Since A5LB never blocks the arming code from exiting the HLU, it does not need this FAR-END ACTIVATE code. A3LB differs from A4LB in that A3LB supports the additional 1 in 6 SmartJack loopback command.

10.07 Two additional loopback points are added for each HDU-451 doubler that is used as shown in Figure 6. NDU1 and NDU2 are executed towards the network. CDU1 and CDU2 are towards the customer. All four loopbacks can be initiated by the 16 bit in-band commands in SPLB states A1LB, A2LB & A3LB as described in Tables 3, 4 & 7 respectively. NDU1 and NDU2, along with the rest of the loopbacks towards the network, can be issued form the Loopback Menu shown in Figure 15. See paragraph 10.09 for front panel- initiated loopbacks. The simplest HiGain system includes two loopback locations: The HLU and the HRU. The most complex HiGain application includes the HLU, HRU & two in-line HDU-451 doublers. Refer to the PairGain HiGain Intelligent Repeater Application Note # 910 Part # 325-910-100 for more SPLB details.

10.08 HiGain may take longer than normal to respond to inband loopback commands when its framing mode is set to UNFR and the inband commands are sent in either an SF or ESF mode. The frame bits override the command bits and cause errors in the command sequence. These errors cause HiGain to reject some sequences. This can extend the detection interval.

10.09 Depressing both the MODE and SEL pushbuttons on the front panel for at least three seconds initiates a MANUAL loopback session. This session allows the user to SEL one of eight HiGain loopbacks. The message, MAN LPBK, appears on the front panel display followed by the message NLO?. If the SEL button is now pressed, an NLOC loopback is executed and the message changes from NLO? to NLOC. If the MODE button is pressed instead of the SEL button, NLO? is replaced by ND1?. This now allows an NDU1 loopback to be executed (if it is a doubler application) with the SEL button. If it is not a doubler application, NRE? follows NLO?. If this same routine is followed, all eight loopbacks (NLOC, NDU1, NDU2, NREM, CLOC, CDU2, CDU1 & CREM) are presented and can be initiated in the sequence listed. Note that NDU1, NDU2, CDU1 & CDU2 only can appear in doubler applications. Once a loopback is executed, it can be terminated and the next loopback option presented by pressing the MODE button. If neither button is pressed for a period of 30 seconds and no loopback is in effect, this manual loopback session terminates and the normal margin displays reappear. If any loopback is in effect, this 30-second time-out is inhibited. The active loopback and the manual loopback session continue until the loopback times out in accordance with the user LBTO setting. Only one loopback can exist at any given time. Depressing both buttons, again for 3 seconds, terminates any active loopback, ends the MANUAL loopback session and returns the display to normal. Note that these same loopbacks can be initiated from RS-232 maintenance port by choosing the LOOPBACK MODE, option D, from the main menu. This displays the Loopback Menu, shown in Figure 15, from which any of the eight loopbacks can be initiated.

C. INSTALLATION, TEST AND MAINTENANCE

11. INSTALLATION

11.01 Upon receipt of the equipment, visually inspect it for signs of damage. If the equipment has been damaged in transit, immediately report the extent of damage to the transportation company and to PairGain.

11.02 The HLU-231 is designed to mount in a 220-configuration ORB shelf or equivalent SXSS, Kentrox T-Term and Wescom 342-30 shelves. The HLU-231 slot pin-outs are shown in Figure 5.

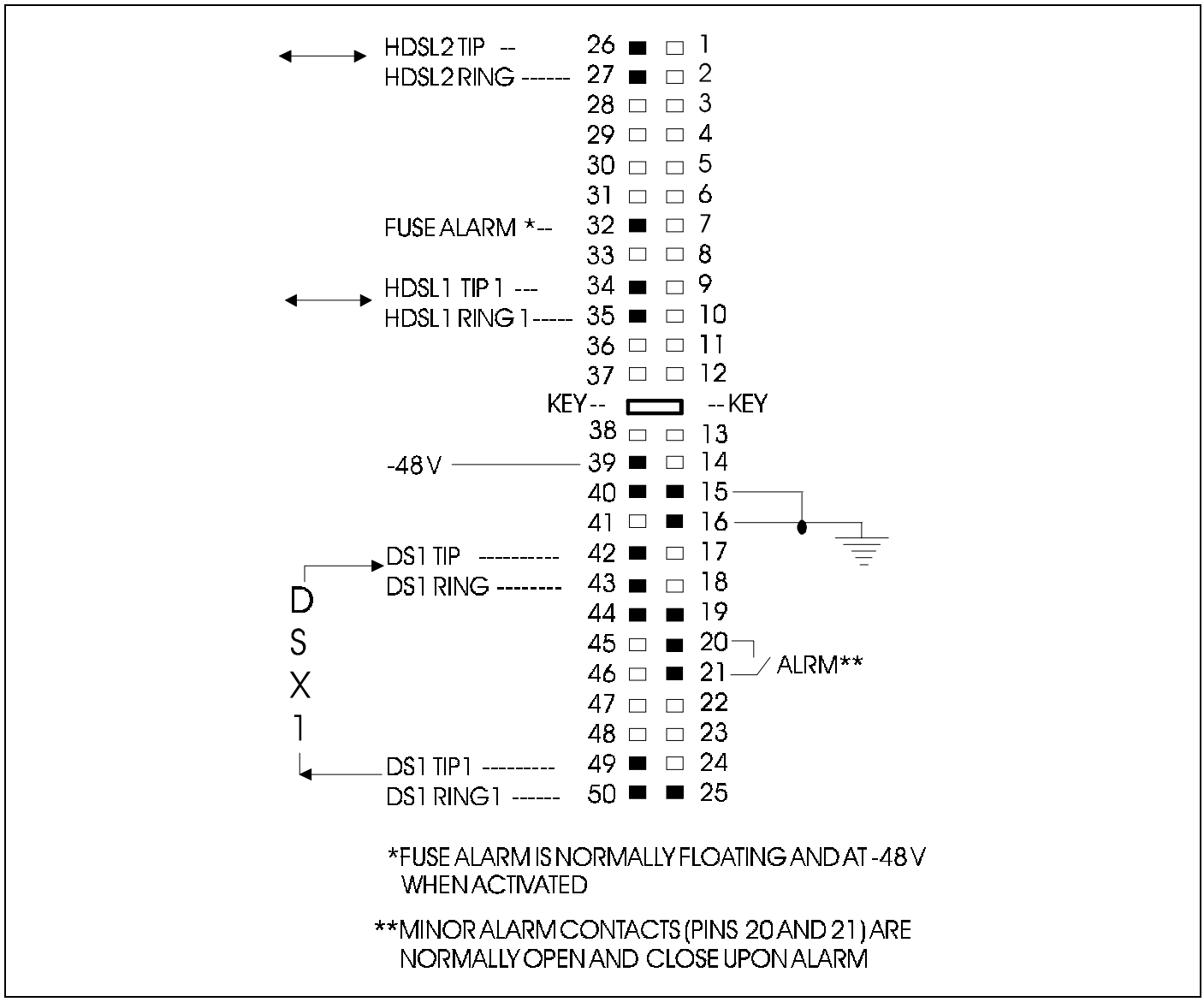

Figure 5. HLU-231 List 3D Pin-Outs. The active pins are highlighted in black in the above illustration.

12. TEST PROCEDURES

12.01 Tables 4 through 9 provide step by step test procedures for the HLU-231 unit as a function of the loopback option selected. These procedures allow verification of the integrity of the HDSL channels at every module location as well as the DS1 channels to the customer and the local DSX-1 interface.

12.02 The HLU 4 character front panel display has many useful system diagnostic messages. They are listed in Table 10. This display turns on when power is initially applied to the 231. In order to conserve power, it only remains on for five minutes if neither the MODE nor SEL buttons are pressed. The use of either button restarts the 5 minute power-control timer.

12.03 If trouble is encountered on the DSX-1 interface, verify that the unit is making a positive connection with the mounting assembly's connector. Also, verify that the pre-equalizer is properly set. All installations should be set to the largest value that does not exceed the distance from the DSX-1 to the shelf

12.04 The transmit and receive T-1 DSX-1 ports have splitting access and bridging miniature 210-series jacks as shown in Figure 5. Connecting one cable between the two BRG jacks and another between the two SPAN jacks splits the XMT and RCV and creates metallic loopbacks towards both the DSX-1 and the HLU. If plugs are inserted in both SPAN jacks. The BRG jacks can be used to send & receive test patterns towards the DSX-1.

TABLE 4. TEST PROCEDURES FOR GNLB OPTION

Step	***Action***
1	Have the C.O. tester send the HRU (3 in 7) in-band loop-up for 5 seconds. Observe that the HLU displays the "NREM" message indicating an HRU loopback is in effect (see Figure 4).
2	Have the C.O. tester transmit a T1 test signal into the HLU and verify that the returned (looped-back) signal is error free.
3	If the above test fails, have the C.O. tester transmit the (3 in 5) in-band loop-down code. Verify that the HLU display returns to normal.
4	Have the C.O. tester send the HLU (4 in 7) in-band loop-up for 5 seconds. Observe that the HLU displays the "NLOC" message indicating an HLU loopback is in effect.
5	Repeat step "2". If the test passes, the problem is in the cable pair or the HRU. If it fails, the problem is in the C.O. equipment
6	The NREM and NLOC loopbacks can also be initiated from the front panel of the HLU with the MODE and SEL pushbuttons. See Paragraph 10.9 for details.
7	The HLU can be looped-up from the remote location (CREM) by issuing the 6 in 7 command at the HRU's DS1 input port.
8	The HRU can be looped-up from the remote location (CLOC) by issuing the 5 in 7 command at the HRU's DS1 input port.
9	Doubler 1 can be looped-up from the remote location (CDU1) by issuing the 4 in 6 command at the HRU's DS1 input port.
10	Doubler 1 can be looped-up from the network location (NDU1) by issuing the 2 in 6 command at the HLU's DS1 input port.
11	Doubler 2 can be looped-up from the remote location (CDU2) by issuing the 5 in 6 command at the HRU's DS1 input port.
12	Doubler 2 can be looped-up from the network location (NDU2) by issuing the 3 in 6 command at the HLU's DS1 input port.

TABLE 5. TEST PROCEDURES FOR A1LB OPTION

Step	***Action***
1	Send into the HLU the inband ARMING and NIU (Network Interface Unit) LPBK code 11000 for at least 5 seconds, or at least 4 repetitions of the 16-bit ESF Data Link ARMING code 0001 0010 11111111.
2	Monitor the output of the HLU-231 for the return of the pattern. Return of pattern indicates that either the HRU has looped-up (If the SMART-JACK LOOPBACK option is ENABLED) or that an external NIU has looped up (If the SMART-JACK LOOPBACK option is DISABLED) and that the HLU and HRU units have been ARMED. Verify that the HLU display intermittently indicates 'ARM and also "SMJK" if the HRU is in loopback. Also verify, if possible, that the LOOPBACK LED of the HRU-412 is flashing, indicating that the HRU is armed or that it is on solid, indicating that it is both armed and in loopback.
3	Once armed the HLU can be looped back (NLOC in Figure 4) by sending IOR (Intelligent Office Repeater) LPBK activation code 1101 0011 1101 0011 for at least 5 seconds. The tester observes the following activation response: • 2 seconds of AIS (all ones), followed by: • 5 seconds of returning data pattern, followed by: • 231 logic errors (including the frame bits) occur in the returned pattern(10 errors if ILR-1 were sent), followed by: • normal looped data. (Note that this error pattern will repeat every 20 seconds as long as the IOR loopback pattern is being sent. This same 20 second repeat scenario also applies to ILR, Time-Out Override and Query commands.) The HiGain Line Unit is now in Logic Loopback (NLOC of Figure 4). The display on the HLU-231 periodically shows NLOC (network local loop) and ARM (the HLU is still armed) in addition to the margin displays. The Loopback Time-out option, which is user settable to NONE, 20, 60 or 120 minutes, determines the duration of this loopback unless it is overridden by the TIME-OUT OVERRIDE command or a loop down command is sent. If the Time-out Override code 1101 0101 1101 0110 is received, the "activation sequence" described in "3" above is repeated and the automatic timed expiration of the loopback is inhibited. If this Time-out Override is sent, then the only way to loop the HLU down is to issue the IR (Intelligent Repeater) LPDN (loopdown) code 1001 0011 1001 0011 or to issue the NIU (Network Interface Unit) LPDN and Disarm code 11100. The automatic time-out timer is restored during subsequent loopback sessions.
4	Upon completion, the tester sends IOR LPDN code 1001 0011 1001 0011 to loop-down the HiGain Line Unit. The unit remains ARMED however, as indicated by the ARM message on the HLU-231 and the flashing of the HRU-412's LOOPBACK LED.

Table continued on next page

TABLE 5. TEST PROCEDURES FOR A1LB OPTION (CONTINUED)

Step	*Action*		
5	Using the following codes, a NETWORK tester can activate loopbacks NLOC or NREM or SMJK (if enabled) shown in Figure 4. A CUSTOMER tester can activate loopbacks CLOC or CREM.		
	ADDRESSABLE 1 (A1LB) REPEATER LOOPBACK COMMANDS		
	ARMING or NIU LPBK (inband)	Arming code	11000 11000..
	ARMING or NIU LPBK (ESF Data Link)	Arming code	1111(F)*1111(F)0100(4)1000(8)
	IR LPDN or DISARM (inband)	Disarming code	11100 11100..
	DISARM (ESF Data Link)	Disarming code	1111(F)1111(F)0010(2)0100(4)
	IOR LPBK (NLOC & CREM 231 errors)	HLU Loop up	1101(D)0011(3)1101(D)0011(3)
	ILR-1 LPBK (NDU1 & CDU1 10 bit errors)	Doubler-1 Loop up	1100(C)0111(7)0100(4)0001(1)
	ILR-20 LPBK (NDU2 & CDU2 200 bit errors)	Doubler-2 Loop up	1100(C)0111(7)0101(5)0100(4)
	ILR-2 LPBK (NREM & CLOC 20 bit errors)	HRU Loop up	1100(C)0111(7)0100(4)0010(2)
	IR LPDN	Loop down (HLU or HRU)	1001(9)0011(3)1001(9)0011(3)
	IR QUERY LPBK	Query loopback	1101(D)0101(5)1101(D)0101(5)
	IR ALTERNATE QUERY LPBK	Alternate Query loopback	1101(D)0101(5)1110(E)1010(A)
	TIME-OUT OVERRIDE	Loopback Time-out Override	1101(D)0101(5)1101(D)0110(6)
	FAR END NIU ACTIVATE	Unblock AIS & pass 2 in 5	1100(C)0101(5)0101(5)0100(4)
	IOR POWER DOWN (HLU)	Removes HDSL line power	0110(6)0111(7)0110(6)0111(7)
	Note: the left most bit arrives first in all 8 sequences. The detection algorithm functions reliably with a random $10E^{-3}$ bit error ratio (BER) on the facility. The IOR POWER DOWN code must remain present for the duration of the power down mode. When this code is removed, HiGain returns to its normal unlooped and unarmed state. *This is the HEX number for the 4 bit group.		
6	After testing is complete, send the universal loopdown [IR (Intelligent Repeater) LPDN] code if the system is to loopdown but remain ARMED. Send the disarm code 11100 if all the equipment is to be looped down, disarmed and returned to normal operation. Note that the ARMED mode has an automatic time-out of 120 minutes.		
7	All of the above loopbacks can also be initiated from the front panel of the HLU with the MODE and SEL pushbuttons. See Paragraph 10.9 for details.		

TABLE 6. TEST PROCEDURES FOR A2LB OPTION

Step	*Action*
1	Send into the HLU the inband ARMING and NIU (Network Interface Unit) LPBK code 11000 for at least 5 seconds, or at least 4 repetitions of the 16-bit ESF Data Link ARMING code 0001 0010 11111111.
2	Monitor the output of the HLU-231 for the return of the pattern. Return of pattern indicates that either the HRU has looped-up (If the SMART-JACK LOOPBACK option is ENABLED) or that an external NIU has looped up (If the SMART-JACK LOOPBACK option is DISABLED) and that the HLU and HRU units have been ARMED. Verify that the HLU display intermittently indicates 'ARM and also "SMJK" if the HRU is in loopback. Also verify, if possible, that the LOOPBACK LED of the HRU-412 is flashing, indicating that the HRU is armed or that it is on solid, indicating that it is both armed and in loopback.
3	Once armed the HLU can be looped back (NLOC in Figure 4) by sending IOR (Intelligent Office Repeater) LPBK activation code 1101 0011 1101 0011 for at least 5 seconds. The tester observes the following activation response: • 2 seconds of AIS (all ones), followed by: • 5 seconds of returning data pattern, followed by: • 231 logic errors (including the frame bits) occur in the returned pattern(10 errors if ILR-1 were sent), followed by: • normal looped data. (Note that this error pattern will repeat every 20 seconds as long as the IOR loopback pattern is being sent. This same 20 second repeat scenario also applies to ILR, Time-Out Override and Query commands.) The HiGain Line Unit is now in Logic Loopback (NLOC of Figure 4). The display on the HLU-231 periodically shows NLOC (network local loop) and ARM (the HLU is still armed) in addition to the margin displays. The Loopback Time-out option, which is user settable to NONE, 20, 60 or 120 minutes, determines the duration of this loopback unless it is overridden by the TIME-OUT OVERRIDE command or a loop down command is sent. If the Time-out Override code 1101 0101 1101 0110 is received, the "activation sequence" described above is repeated and the automatic timed expiration of the loopback is inhibited. If this Time-out Override is sent, then the only way to loop the HLU down is to issue the IR (Intelligent Repeater) LPDN (loopdown) code 1001 0011 1001 0011 or to issue the NIU (Network Interface Unit) LPDN and Disarm code 11100. The automatic time-out timer is restored during subsequent loopback sessions.
4	Upon completion, the tester sends IOR LPDN code 1001 0011 1001 0011 to loop-down the HiGain Line Unit. The unit remains ARMED however, as indicated by the ARM message on the HLU-231 and the flashing of the HRU-412's LOOPBACK LED.

Table continued on next page

TABLE 6. TEST PROCEDURES FOR A2LB OPTION (CONTINUED)

Step	*Action*		
5	Using the following codes, a NETWORK tester can activate loopbacks NLOC or NREM or SMJK (if enabled) shown in Figure 4. A CUSTOMER tester can activate loopbacks CLOC or CREM.		
	ADDRESSABLE 2 (A2LB) REPEATER LOOPBACK COMMANDS		
	ARMING or NIU LPBK (inband)	Arming code	11000 11000..
	ARMING or NIU LPBK (ESF Data Link)	Arming code	1111(F)*1111(F)0100(4)1000(8)
	IR LPDN or DISARM (inband)	Disarming code	11100 11100..
	DISARM (ESF Data Link)	Disarming code	1111(F)1111(F)0010(2)0100(4)
	IOR LPBK (NLOC & CREM 231 errors)	HLU Loop up	1101(D)0011(3)1101(D)0011(3)
	ILR-1 LPBK (NDU1 & CDU1 10 bit errors)	Doubler-1 Loop up	1100(C)0111(7)0100(4)0001(1)
	ILR-20 LPBK (NDU2 & CDU2 200 errors)	Doubler-2 Loop up	1100(C)0111(7)0101(5)0100(4)
	ILR-2 LPBK (NREM & CLOC 20 bit errors)	HRU Loop up	1100(C)0111(7)0100(4)0010(2)
	IR LPDN	Loop down (HLU or HRU)	1001(9)0011(3)1001(9)0011(3)
	IR QUERY LPBK	Query loopback	1101(D)0101(5)1101(D)0101(5)
	IR ALTERNATE QUERY LPBK	Alternate Query loopback	1101(D)0101(5)1110(E)1010(A)
	TIME-OUT OVERRIDE	Loopback Time-out Override	1101(D)0101(5)1101(D)0110(6)
	FAR END NIU ACTIVATE	Unblock AIS & pass 2 in 5	1100(C)0101(5)0101(5)0100(4)
	IOR POWER DOWN (HLU)	Removes HDSL line power	0110(6)0111(7)0110(6)0111(7)
	Note: the left most bit arrives first in all 8 sequences. The detection algorithm functions reliably with a random $10E^{-3}$ bit error ratio (BER) on the facility. The IOR POWER DOWN code must remain present for the duration of the power down mode. When this code is removed, HiGain returns to its normal unlooped and unarmed state. *This is the HEX number for the 4 bit group.		
6	After testing is complete, send the universal loopdown [IR (Intelligent Repeater) LPDN] code if the system is to loopdown but remain ARMED. Send the disarm code 11100 if all the equipment is to be looped down, disarmed and returned to normal operation. Note that the ARMED mode has an automatic time-out of 120 minutes.		
7	All of the above loopbacks can also be initiated from the front panel of the HLU with the MODE and SEL pushbuttons. See Paragraph 10.9 for details.		

TABLE 7. TEST PROCEDURES FOR A3LB OPTION

<table>
<tr><th>Step</th><th>Action</th></tr>
<tr><td>1</td><td>The HiGain Line Unit can be looped back (NLOC in Figure 4) by sending the (Addressable Office Repeater) LPBK activation code 1111(F) 1111(F) 0001(1) 1110(E) for at least 5 seconds. This causes the HLU to enter its NLOC state shown in Figure 4. The display on the HLU-231 alternates between NLOC (network local loop) and the margin displays. The Loopback Time-out option, which is user settable to NONE, 20, 60 or 120 minutes, determines the duration of this loopback unless it is overridden by the reception of a second identical 16 bit loopup command before the timer expires. When this time-out override state exists, the only way to loop the HLU down is to issue one of the three loopdown commands listed in Step 2. The automatic time-out mode is restored during subsequent loopback sessions.</td></tr>
<tr><td>2</td><td>The following list summarizes the codes required to execute all the HiGain loopbacks shown in Figure 6. Note that all code sequences must be present for at least 5 seconds.
ABBREVIATIONS USED BELOW:
LU = LoopUp
LD = LoopDown
NI = Network Interface
CI = Customer Interface
ADDRESSABLE 3 (A3LB) REPEATER LOOPBACK COMMANDS
<table>
<tr><th>Position</th><th>Name</th><th>Code</th></tr>
<tr><td>HLU-231 LU FROM NI</td><td>NLOC</td><td>1111(F)*1111(F)0001(1)1110(E)</td></tr>
<tr><td>HLU-231 LU FROM CI</td><td>CREM</td><td>0011(3)1111(F)0001(1)1110(E)</td></tr>
<tr><td>HDU-451 DOUBLER 1 FROM NI</td><td>NDU1</td><td>1111(F)*1111(F)0000(0)0100(4)</td></tr>
<tr><td>HDU-451 DOUBLER 1 FROM CI</td><td>CDU1</td><td>0011(3)*1111(F)0000(0)0100(4)</td></tr>
<tr><td>HDU-451 DOUBLER 2 FROM NI</td><td>NDU2</td><td>1111(F)*1111(F)0000(0)0101(6)</td></tr>
<tr><td>HDU-451 DOUBLER 2 FROM CI</td><td>CDU2</td><td>0011(3)*1111(F)0000(0)0101(6)</td></tr>
<tr><td>HRU-412 LU FROM NI</td><td>NREM</td><td>1111(F)1111(F)0000(0)0010(2)</td></tr>
<tr><td>HRU-412 LU FROM CI</td><td>CLOC</td><td>0011(3)1111(F)0000(0)0010(2)</td></tr>
<tr><td>HRU-412 LU FROM NI</td><td>SMJK</td><td>11000 11000 11000..</td></tr>
<tr><td>HRU-412 LU FROM NI</td><td>SMJK</td><td>100000 100000 100000...</td></tr>
<tr><td>HRU-412 LU FROM NI</td><td>SMJK</td><td>100000 100000 100000...</td></tr>
<tr><td>HRU-412 LU FROM NI (ESF-DL)</td><td>SMJK</td><td>1111(F)1111(F)0100(4)1000(8)</td></tr>
<tr><td>HLU & HRU LD FROM NI OR CI</td><td></td><td>11100 11100 11100...</td></tr>
<tr><td>HLU & HRU LD FROM NI OR CI</td><td></td><td>100 100 100 ...</td></tr>
<tr><td>HLU & HRU LD FROM NI OR CI (ESF-DL)</td><td></td><td>1111(F)1111(F)0010(2)0100(4)</td></tr>
</table>
Note: the left most bit arrives first in all sequences. The detection algorithm functions reliably with a random $10E^{-3}$ bit error ratio (BER) on the facility. *This is the HEX number for the 4 bit group.</td></tr>
<tr><td>3</td><td>All of the above loopbacks can also be initiated from the front panel of the HLU with the MODE and SEL pushbuttons. See Paragraph 10.9 for details.</td></tr>
</table>

TABLE 8. TEST PROCEDURES FOR A4LB OPTION

<table>
<tr><th>Step</th><th>Action</th></tr>
<tr><td>1</td><td>The HiGain Line Unit can be looped back (NLOC in Figure 4) by sending the (Addressable Office Repeater) LPBK activation code 1111(F) 1111(F) 0001(1) 1110(E) for at least 5 seconds. This causes the HLU to enter its NLOC state shown in Figure 4. The display on the HLU-231 alternates between NLOC (network local loop) and the margin displays. The Loopback Time-out option, which is user settable to NONE, 20, 60 or 120 minutes, determines the duration of this loopback unless it is overridden by the reception of a second identical 16 bit loopup command before the timer expires. When this time-out override state exists, the only way to loop the HLU down is to issue one of the three loopdown commands listed in Step 2. The automatic time-out mode is restored during subsequent loopback sessions.</td></tr>
<tr><td>2</td><td>The following list summarizes the codes required to execute all the HiGain loopbacks shown in Figure 4. Note that all code sequences must be present for at least 5 seconds.

ABBREVIATIONS USED BELOW:
LU = LoopUp
LD = LoopDown
NI = Network Interface
CI = Customer Interface

ADDRESSABLE 4 (A4LB) REPEATER LOOPBACK COMMANDS
<table>
<tr><th>Position</th><th>Name</th><th>Code</th></tr>
<tr><td>HLU-231 LU FROM NI</td><td>NLOC</td><td>1111(F)*1111(F)0001(1)1110(E)</td></tr>
<tr><td>HLU-231 LU FROM CI</td><td>CREM</td><td>0011(3)1111(F)0001(1)1110(E)</td></tr>
<tr><td>HDU-451 DOUBLER 1 FROM NI</td><td>NDU1</td><td>1111(F)*1111(F)0000(0)0100(4)</td></tr>
<tr><td>HDU-451 DOUBLER 1 FROM CI</td><td>CDU1</td><td>0011(3)*1111(F)0000(0)0100(4)</td></tr>
<tr><td>HDU-451 DOUBLER 2 FROM NI</td><td>NDU2</td><td>1111(F)*1111(F)0000(0)0101(6)</td></tr>
<tr><td>HDU-451 DOUBLER 2 FROM CI</td><td>CDU2</td><td>0011(3)*1111(F)0000(0)0101(6)</td></tr>
<tr><td>HRU-412 LU FROM NI</td><td>NREM</td><td>1111(F)1111(F)0000(0)0010(2)</td></tr>
<tr><td>HRU-412 LU FROM CI</td><td>CLOC</td><td>0011(3)1111(F)0000(0)0010(2)</td></tr>
<tr><td>HRU-412 LU FROM NI</td><td>SMJK</td><td>11000 11000 11000</td></tr>
<tr><td>HRU-412 LU FROM NI (ESF-DL)</td><td>SMJK</td><td>1111(F)1111(F)0100(4)1000(8)</td></tr>
<tr><td>HLU & HRU LD FROM NI OR CI</td><td></td><td>11100 11100 11100</td></tr>
<tr><td>HLU & HRU LD FROM NI OR CI</td><td></td><td>100 100 100</td></tr>
<tr><td>HLU & HRU LD FROM NI OR CI (ESF-DL)</td><td></td><td>1111(F)1111(F)0010(2)0100(4)</td></tr>
</table>
Note: The left most bit arrives first in all sequences. The detection algorithm functions reliably with a random $10E^{-3}$ bit error ratio (BER) on the facility.</td></tr>
<tr><td>3</td><td>All of the above loopbacks can also be initiated from the front panel of the HLU with the MODE and SEL pushbuttons. See Paragraph 10.9 for details. *This is the HEX number for the 4 bit group.</td></tr>
</table>

TABLE 9. TEST PROCEDURES FOR A5LB OPTION

Step	***Action***
1	Send into the HLU the inband ARMING and NIU (Network Interface Unit) LPBK code 11000 for at least 5 seconds, or at least 4 repetitions of the 16-bit ESF Data Link ARMING code 0001 0010 11111111.
2	Monitor the output of the HLU-231 for the return of the pattern. Return of pattern indicates that either the HRU has looped-up (if the SMART-JACK LOOPBACK option is ENABLED) or that an external NIU has looped up (if the SMART-JACK LOOPBACK option is DISABLED) and that the HLU and HRU units have been ARMED. Verify that the HLU display intermittently indicates 'ARM and also "SMJK" if the HRU is in loopback. Also verify, if possible, that the LOOPBACK LED of the HRU-412 is flashing, indicating that the HRU is armed or that it is on solid, indicating that it is both armed and in loopback.
3	Once armed the HLU can be looped back (NLOC in Figure 4) by sending IOR (Intelligent Office Repeater) LPBK activation code 1101 0011 1101 0011 for at least 5 seconds. The tester observes the following activation response: • 2 seconds of AIS (all ones), followed by: • 5 seconds of returning data pattern, followed by: • 231 logic errors (including the frame bits) occur in the returned pattern(10 errors if ILR-1 were sent), followed by: • normal looped data (Note that this error pattern will repeat every 20 seconds as long as the IOR loopback pattern is being sent. This same 20 second repeat scenario also applies to ILR, Time-Out Override and Query commands.) The HiGain Line Unit is now in Logic Loopback (NLOC of Figure 4). The display on the HLU-231 periodically shows NLOC (network local loop) and ARM (the HLU is still armed) in addition to the margin displays. The Loopback Time-out option, which is user settable to NONE, 20, 60 or 120 minutes, determines the duration of this loopback unless it is overridden by the TIME-OUT OVERRIDE command or a loop down command is sent. If the Time-out Override code 1101 0101 1101 0110 is received, the "activation sequence" described above is repeated and the automatic timed expiration of the loopback is inhibited. If this Time-out Override is sent, then the only way to loop the HLU down is to issue the IR (Intelligent Repeater) LPDN (loopdown) code 1001 0011 1001 0011 or to issue the NIU (Network Interface Unit) LPDN and Disarm code 11100 .The automatic time-out timer is restored during subsequent loopback sessions.
4	Upon completion, the tester sends IOR LPDN code 1001 0011 1001 0011 to loop-down the HiGain Line Unit. The unit remains ARMED, however, as indicated by the ARM message on the HLU-231 and the flashing of the HRU-412's LOOPBACK LED.

Table continued on next page

TABLE 9. TEST PROCEDURES FOR A5LB OPTION (CONTINUED)

Step	*Action*
5	Using the following codes, a NETWORK tester can activate loopbacks NLOC or NREM or SMJK (if enabled) shown in Figure 4. A CUSTOMER tester can activate loopbacks CLOC or CREM.

ADDRESSABLE 5 (A5LB) REPEATER LOOPBACK COMMANDS

ARMING or NIU LPBK (inband)	Arming code	11000 11000
ARMING or NIU LPBK (ESF Data Link)	Arming code	1111(F)*1111(F)0100(4)1000(8)
IR LPDN or DISARM (inband)	Disarming code	11100 11100
DISARM (ESF Data Link)	Disarming code	1111(F)1111(F)0010(2)0100(4)
IOR LPBK (NLOC & CREM 231 errors)	HLU Loop up	1101(D)0011(3)1101(D)0011(3)
ILR-1 LPBK (NDU1 & CDU1 10 bit errors)	Doubler-1 Loop up	1100(C)0111(7)0100(4)0001(1)
ILR-20 LPBK (NDU2 & CDU2 200 errors)	Doubler-2 Loop up	1100(C)0111(7)0101(5)0100(4)
ILR-2 LPBK (NREM & CLOC 20 bit errors)	HRU Loop up	1100(C)0111(7)0100(4)0010(2)
IR LPDN	Loop down (HLU or HRU)	1001(9)0011(3)1001(9)0011(3)
IR QUERY LPBK	Query loopback	1101(D)0101(5)1101(D)0101(5)
IR ALTERNATE QUERY LPBK	Alternate Query loopback	1101(D)0101(5)1110(E)1010(A)
TIME-OUT OVERRIDE	Loopback Time-out Override	1101(D)0101(5)1101(D)0110(6)
IOR POWER DOWN (HLU)	Removes HDSL line power	0110(6)0111(7)0110(6)0111(7)

Note: The left most bit arrives first in all 8 sequences. The detection algorithm functions reliably with a random $10E^{-3}$ bit error ratio (BER) on the facility. The IOR POWER DOWN code must remain present for the duration of the power down mode. When this code is removed, HiGain returns to its normal unlooped and unarmed state. *This is the HEX number for the 4 bit group.

6	After testing is complete, send the universal loopdown [IR (Intelligent Repeater) LPDN] code if the system is to loopdown but remain ARMED. Send the disarm code 11100 if all the equipment is to be looped down, disarmed and returned to normal operation. Note that the ARMED mode has an automatic time-out of 120 minutes.
7	All of the above loopbacks can also be initiated from the front panel of the HLU with the MODE and SEL pushbuttons. See Paragraph 10.9 for details.

TABLE 10. HLU 4-CHARACTER FRONT PANEL MESSAGES

Message	*Full Name*	*Description*
CREM	Customer Remote Loopback	Signal from customer is looped back to customer at HLU-231.
NLOC	Network Local Loopback	DSX signal is looped back to DSX at HLU.
CLOC	Customer Local Loopback	Signal from Customer is looped back to customer at HRU-412.
NREM	Network Remote Loopback	DSX signal is looped back to DSX at HRU.
SMJK	Remote Smartjack Loopback	Signal from DSX is looped back at HRU by the HRU smartjack module.
TLOS	Transmit Loss Of Signal	HRU is in a logic loopback state caused by a loss of its T1 input from the NI, if enabled via SAIS option.
FERR	Framing Bit Error Occurred	Framing bit error occurred at HLU T1 input.
LBPV	Local Bipolar Violation	A bipolar violation has been received at the T1 input to the HLU-231.
SIG 1 or 2	Signal 1 or Signal 2	The HLU & HRU or 1st Doubler transceivers are trying to establish contact with each other on Loops 1 or 2.
S2L1 or 2	Signal 2 Loop 1 or Loop 2	The 1st Doubler and either HRU or 2nd Doubler transceivers are trying to establish contact with each other on loops 1 or 2 of span 2.
S3L1 or 2	Signal 3 Loop 1 or Loop 2	The 2nd Doubler and HRU transceivers are trying to establish contact with each other on loops 1 or 2 of span 3.
ACQ 1 or 2	Acquisition 1 or Acquisition 2	The HLU & HRU or 1st Doubler multiplexers are trying to establish synchronization over each of Loops 1 or 2..
A2L1 or 2	Acquisition 2 Loop 1 or Loop 2	The 1st Doubler and either HRU or 2nd Doubler multiplexers are trying to establish synchronization with each other on loops 1 or 2 of span 2.
A3L1 or 2	Acquisition 3 Loop 1 or Loop 2	The 2nd Doubler and HRU multiplexers are trying to establish synchronization with each other on loops 1 or 2 of span 3.
H1ES	HDSL CRC Error Channel 1	HLU HDSL Loop 1 CRC error.
H2ES	HDSL CRC Error Channel 2	HLU HDSL Loop 2 CRC error.
ARM	HiGain System ARMED	Armed to respond to Intelligent Repeater Loop Codes.
ACO	Alarm Cut Off	A MNRALM has occurred, and been retired to an ACO condition, by pressing the SEL button on the HLU front panel.
SELF TEST		The HLU is in a self test mode. This occurs every power ON/OFF cycle.
ALRM	Alarm Condition Exists	A minor alarm MNRALM condition is in effect.

Table continued on next page

TABLE 10. HLU 4 CHARACTER FRONT PANEL MESSAGES (CONTINUED)

Message	*Full Name*	*Description*
1=xx or 2=yy	HDSL Loop Margins	Indicates the power of the received HDSL signal on each Loop relative to noise. Any value of '06' or greater is adequate for reliable system operation.
PWR FEED SHRT	Power Feed Short	Indicates a short between the 2 HDSL pairs. This same message can occur with an HRU that is drawing the correct amount of power over good cable pairs but cannot communicate with the HRU.
PWR FEED OPEN	Power Feed Open	Indicates an open circuit in the T&R of either HDSL pair.
BAD RT?	No response from HRU	The HLU does not receive any response from the HRU. Thus, the HRU's integrity is questionable.
VER	HLU Software Version #	This is displayed during the System Settings review mode. Depress the Mode button for 3 seconds.
LIST 0xL	HLU's List #	Displayed during System Settings review mode defined above.
FRM	Frame:SF,ESF,UNFR,NONE	Defines the type of frame pattern being received from the DSX-1. Displayed during System Settings mode defined above.
LOSW	Loss of Sync Word	Indicates that 1 of the HDSL loops has lost sync. Causes a minor alarm.
LLOS	Local Loss of Signal	Indicates that no signal is detected at the T1 input to the HLU. Causes a minor alarm.
RLOS	Remote Loss of Signal	Indicates that no signal is detected at the T1 input to the HRU. Causes a minor alarm.
DS1	DS1 BPV errors	Indicates that the number of BPVs at the HLU and HRU DS1 inputs that have exceeded the 24 hour ES threshold. Causes a minor alarm.
DS0	DS0 Blocked Channels	Indicates status of DS0 blocked channels. NONE indicates no channels are blocked. BLK indicates some channels are blocked.
MAL1(2)	Margin Alarm Loop 1 or 2	The margin on HDSL loop 1 (2) has dropped below the threshold (1 to 15 dB) set by the user.

TABLE 11 HLU-231 STATUS MENU DEFINITIONS

Message	*Full Name*	*Description*
ALARMS		
NONE	No Alarms	
LLOS	Local Loss of Signal	No signal from local T1 interface.
RLOS	Remote Loss of Signal	No signal from remote T1 interface.
MNR	Minor Alrm	A Minor Alarm condition is in effect.
LOSW1(2)	Loss of Sync Word 1 or 2	HDSL loop 1 or 2 has lost sync.
H1ES	HDSL Loop 1 Errored Second	Loop 1's CRC have exceeded the ES threshold.
H2ES	HDSL Loop 2 ES	Loop 2's CRC have exceeded the ES threshold.
DS1	Digital Service 1	BPV's have exceeded the ES threshold.
R(L)AIS	Remote (Local) Alarm Indicating Signal	Indicates an AIS (all 1's) pattern is being transmitted from the local or remote T1 output port.
MAL1	Margin Alarm HDSL Loop 1	The margin on HDSL Loop 1 dropped below the user Margin Alarm Threshold (1 to 15).
MAL2	Margin Alarm HDSL Loop 2	The margin on HDSL Loop 2 dropped below the user Margin Alarm Threshold (1 to 15).
CHREV	Channels Reversed	Channel 1 & 2 HDSL pairs reversed at the HDU or HRU line input ports.
LOOPBACKS		
SMJK	Smartjack Loopback	Loopback at HRU towards network initiated by 2 in 5 in-band loopback code or out-of-band ESF data link code. See Figure 4.
NREM	Network Remote Loopback	Loopback at HRU (remote) towards network initiated from CO (network) by intelligent line repeater #1 code, HRU front panel push-button or maintenance terminal. See Figure 4.
NLOC	Network Local Loopback	Loopback at HLU (local) towards network initiated from CO (network) by intelligent office repeater code or by pressing both the MODE & SEL HLU front panel pushbuttons. See Figure 4.
HDU1	Network Doubler 1 Loopback	Loopback at Doubler 1 towards network initiated from CO (network) by intelligent office repeater #1 code or from Loopback Mode menu or by pressing both the MODE & SEL HLU front panel pushbuttons.
HDU2	Network Doubler 2 Loopback	Loopback at Doubler 2 towards network initiated from CO (network) by intelligent repeater # 20 code or from Loopback Mode menu or by pressing both the MODE & SEL HLU front panel pushbuttons.
CLOC	Customer Local Loopback	Loopback at HRU (local) towards CI initiated from CPE (customer) by intelligent line repeater #1 code. See Figure 4.
CREM	Customer Remote Loopback	Loopback at HLU (remote) towards customer initiated from CPE (customer) by intelligent office repeater code. See Figure 4.
CDU1	Customer Doubler 1 Loopback	Loopback a Doubler 1 towards CI initiated from CPE (customer) by intelligent line repeater #2 code . See Figure 4
CDU2	Customer Doubler 1 Loopback	Loopback a Doubler 1 towards CI initiated from CPE (customer) by intelligent line repeater #2 code . See Figure 4
ARM	Armed	HiGain detected the intelligent repeater loopback (2 in 5) arming code.
TLOS	Transmit Loss Of Signal loopback	HRU is in a logic loopback state caused by a loss of its T1 input from the NI, if enabled via SAIS option.

TABLE 12. GLOSSARY OF HIGAIN TERMS

Term	*Definition*
MARGINS	Indicates the excess signal to noise ratio, at either the HLU or HRU, relative to a 10^{-7} Bit Error Rate. 1st value is current margin, 2nd value is minimum margin since (C)leared last, 3rd value is maximum value since cleared, and NA means Not Available. The normal range of a typical margin is from 22 to 6 dB.
PULSE ATTENUATION	Indicates the attenuation of the 2B1Q pulse from the distant end. HiGain operates with pulse attenuations in excess of 30 dB. This value is related to the cable pair's 196 kHz loss. The pulse attenuation is a more direct indication of the loop attenuation to the 2B1Q signal than the 196 kHz loss. The normal range of pulse attenuation from 1 to 32 dB.
PPM	Indicates the relative offset of the crystal oscillator in the HRU-412 from the HLU-231's crystal oscillator. Any value between -64 and +64 is adequate. Values outside this range indicate out of tolerance components or excessive temperature drift of critical components.
HDSL 24 Hour ES (Errored Seconds)	The number of 1 second intervals that contained at least 1 CRC error. This value is a running total of the last 24 Hours.
HDSL 24 Hour UAS (Unavailable Seconds)	The number of seconds the HDSL loop was out of sync.
DS1 BPV Seconds (ES)	The number of seconds in which at least 1 bipolar violation was detected on the DS1 input.
DS1 UAS Count	The number of seconds during which the DS1 input signal was absent (125 or more consecutive 0's).
Frame type	Type of DS1 framing used on the input stream (SF, ESF, Unframed or No Activity).
Code type	Type of DS1 line coding used (AMI, B8ZS, AMI : ZBTSI or B8ZS : ZBTSI). The latter two conditions indicate the code type that is being received when HiGain is set to its ZBTS mode. In either the AMI or B8ZS DS1 code mode, it displays the selected code. In the AUTO mode, it displays the code being received.
Ver W.xL Ver a.b	"wx" = the software version number of the HLU. "ab" = the software version number of the HRU. "y" = the list number of the HLU. "c" = the list number of the HRU.

13. DESCRIPTION OF MAINTENANCE SCREENS

13.01 Figure 6 is the main menu of the Maintenance Terminal. Its eight sub-menus provide many useful provisioning, test and monitoring tools.

13.02 Figures 7 thru 11 show the HLU status screens for both doubler and non doubler applications. The Span 1 screen contains data on the two HDSL loops between the HLU and the first doubler. Span 2 refers to the loops between the first doubler and the HRU for single-doubler circuits or between the first and second doublers for two-doubler circuits. Span 3 refers to the loops between the second doubler and the HRU for two-doubler circuits. All status screen contain the same DS1 interface information.

13.03 Figure 12 shows the Set Clock menu. Both the time and date are set with this menu. Set the hours and minutes, using the military convention. Setting the seconds is optional. Enter the date in the sequence and format shown. List 1 HRU-412 units having software versions 6.4 and above, and all List 6, List 7 HRU units can also be set to the same time and date as the HLU by entering a “U” to the “Update Remote” query. All time information is lost when power is removed. The last date, however, is retained in NVRAM and reappears when power is restored.

13.04 Figure 13 shows the System Settings screen. All 14 user options can be set from this screen. To change any option, enter its character key which is shown inside the parenthesis within each parameter description. This causes the screen to refresh with the new parameter value shown in the second column. After all parameters have been selected, enter the E (Exit) key followed by the C (Confirm) key. The newly selected parameters are now activated.

13.05 Figure 14 shows the Loopback Menu for a two-doubler system. Each of the four modules can be looped back towards the network or the customer from this screen. NDU2 & CDU2 are not available for single doubler applications and only NLOC, NREM, CLOC & CREM are available for non doubler applications.

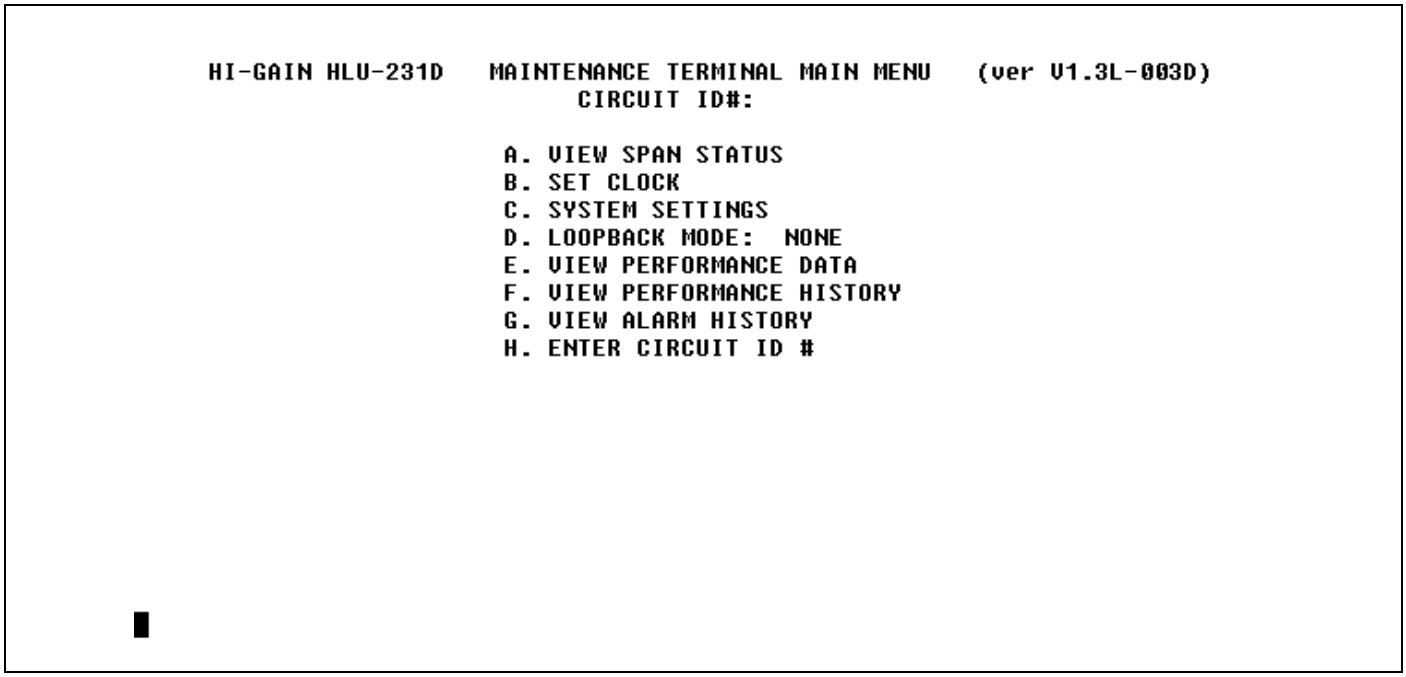

Figure 6. HLU-231 Main Menu.

13.06 Figures 15 thru 26 show the Performance Data screens for both doubler and non doubler applications. Both the Errored and Unavailable Seconds for both HDSL loops and each T-1 input are listed at 15-minute intervals over a four hour time interval. The Span 1 screen contains data on the two HDSL loops between the HLU and the first doubler HDU1. Span 2 refers to the loops between the first doubler HDU1 and the HRU for one doubler circuits or between the first and second doublers (HDU1 & HDU2) for two-doubler circuits. Span 3 refers to the loops between the second doubler and the HRU for two-doubler circuits. All status screens contain the same DS1 interface errors. Earlier & later data , in four hour chunks, can be accessed by entering "P" (previous) or "N" (next) respectively. Performance data from the different spans can be accessed by entering "S" (span). All of the counters can be set to zero by selecting the (C)lear option from the HLU Status Screen shown in Figure 8. Note that since the HLU is considered the master module, this clears all performance data screens at both the HLU & the HRU. The dumb terminal RS-232 interface at the HRU does not allow the counters to be cleared.

13.07 Figures 22 thru 26 show the 7-Day History Performance Data screens for both doubler and non doubler applications. The Errored and Unavailable Seconds for both HDSL loops and each of the two DS1 inputs are listed for the Current and the seven previous days. The Span 1 screen contains data on the two HDSL loops between the HLU and the first doubler HDU1. Span 2 refers to the loops between the first doubler HDU1 and the HRU for one-doubler circuits or between the first and second doublers (HDU1 & HDU2) for two-doubler circuits. Span 3 refers to the loops between the second doubler and the HRU for two- doubler circuits. All status screens contain the same DS-1 interface errors. All of the counters can be set to zero by selecting the (C)lear option from the HLU Status Screen shown in Figure 8. Note that since the HLU is considered the master module, this clears all performance data screens at both the HLU & the HRU. The dumb terminal RS-232 interface at the HRU does not allow the counters to be cleared. The HLU counters are not affected.

13.08 Figures 26 thru 28 show the Alarm History screens for both doubler and non doubler applications. The alarms are defined in Section 5. The LOS and PWR system alarms are common to all spans. Only the LOSW, ES & MARGIN are span specific alarms. The PWR-OPEN and SHORT alarms indicate conditions on the HLU span as measured by the HLU. Neither PWR alarm is available on the other spans. The First & Last columns contain the time & date stamp of the first & last occurrence of each alarm. The Current column shows the status of each alarm. The Count column lists the number of times each alarm occurred. All the data can be cleared with the (C)lear command. The maximum non-overflowing count is 999. The Span 1 screen concerns alarms that occurred on the two HDSL loops between the HLU and the first doubler HDU1. Span 2 refers to the loops between the first doubler HDU1 and the HRU for one-doubler circuits or between the first and second doublers (HDU1 & HDU2) for two-doubler circuits. Span 3 refers to the loops between the second doubler and the HRU for two-doubler circuits.

13.09 Selection H from the main menu allows the Circuit ID# to be set. It is limited to 24 alpha numeric characters. It, like the system settings, is stored in NVRAM and thus remains when power is lost. Note that the Circuit ID# is not available at the HRU maintenance port.

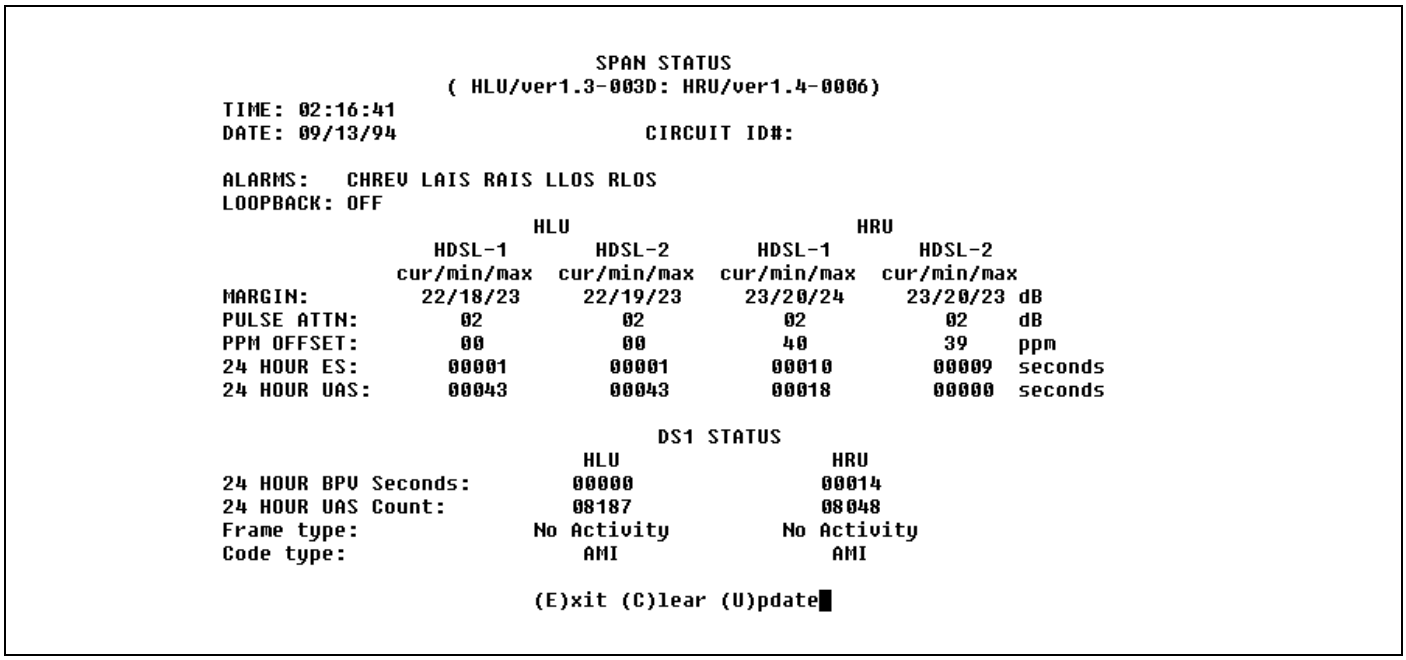

Figure 7. HLU Status Display (No Doublers).

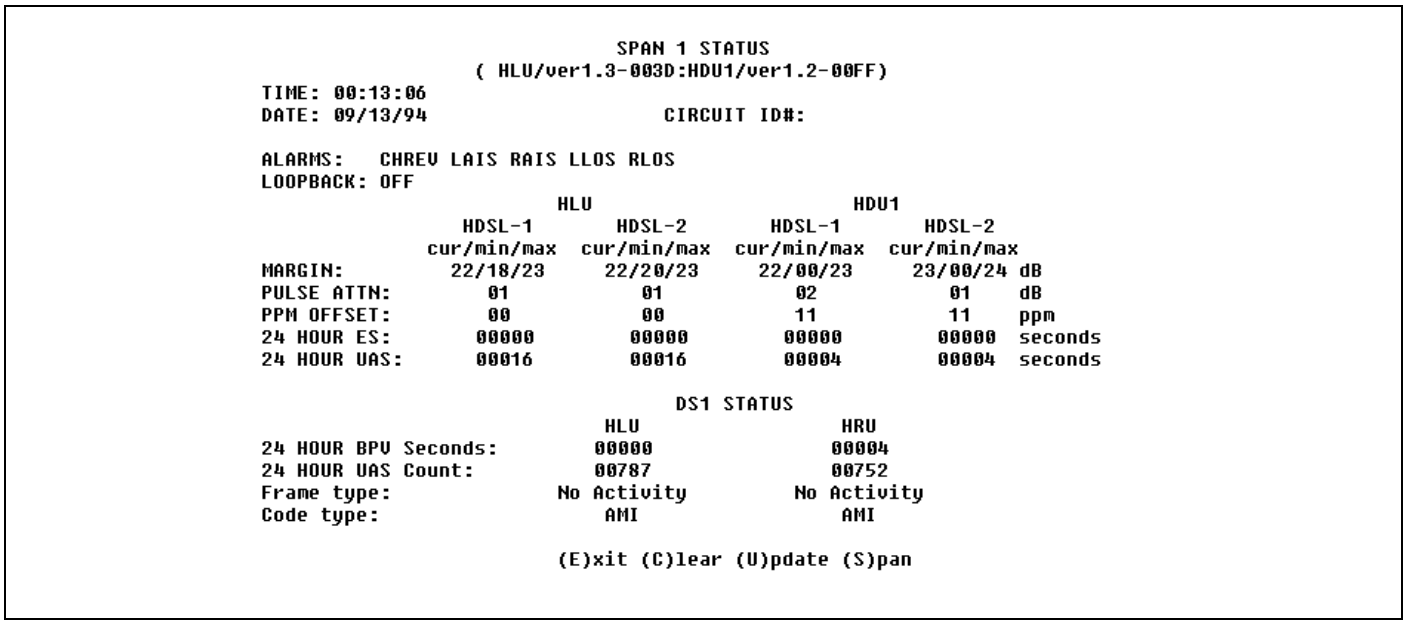

Figure 8. HLU Status Display, Span 1 (1 or 2 Doublers).

```
                          SPAN 2 STATUS
                  (HDU1/ver1.2-00FF: HRU/ver1.4-0006)
TIME: 00:43:06
DATE: 09/13/94                      CIRCUIT ID#:

ALARMS:   LAIS RAIS LLOS RLOS
LOOPBACK: OFF
                        HDU1                          HRU
                  HDSL-1       HDSL-2       HDSL-1       HDSL-2
                cur/min/max  cur/min/max  cur/min/max  cur/min/max
MARGIN:           22/00/23     22/00/23     23/18/23     22/19/23 dB
PULSE ATTN:         02           02           01           01     dB
PPM OFFSET:         00           00           27           27     ppm
24 HOUR ES:       00001        00000        00004        00003  seconds
24 HOUR UAS:      00003        00003        00000        00000  seconds

                                DS1 STATUS
                                  HLU                  HRU
24 HOUR BPV Seconds:            00000                00004
24 HOUR UAS Count:              02587                02552
Frame type:                 No Activity          No Activity
Code type:                      AMI                  AMI

                          (E)xit (C)lear (U)pdate (S)pan
```

Figure 9. HLU Status Display, Span 2 (1 Doubler).

```
                          SPAN 2 STATUS
                 (HDU1/ver1.2-00FF:HDU2/ver1.4-00FF)
TIME: 01:30:50
DATE: 09/13/94                      CIRCUIT ID#:

ALARMS:   LAIS RAIS LLOS RLOS
LOOPBACK: OFF
                        HDU1                          HDU2
                  HDSL-1       HDSL-2       HDSL-1       HDSL-2
                cur/min/max  cur/min/max  cur/min/max  cur/min/max
MARGIN:           22/00/23     22/00/23     22/00/23     22/00/22 dB
PULSE ATTN:         01           01           01           01     dB
PPM OFFSET:         00           00           26           26     ppm
24 HOUR ES:       00003        00001        00001        00001  seconds
24 HOUR UAS:      00010        00010        00004        00004  seconds

                                DS1 STATUS
                                  HLU                  HRU
24 HOUR BPV Seconds:            00000                00008
24 HOUR UAS Count:              05451                05374
Frame type:                 No Activity          No Activity
Code type:                      AMI                  AMI

                          (E)xit (C)lear (U)pdate (S)pan
```

Figure 10. HLU Status Display, Span 2 (2 Doublers).

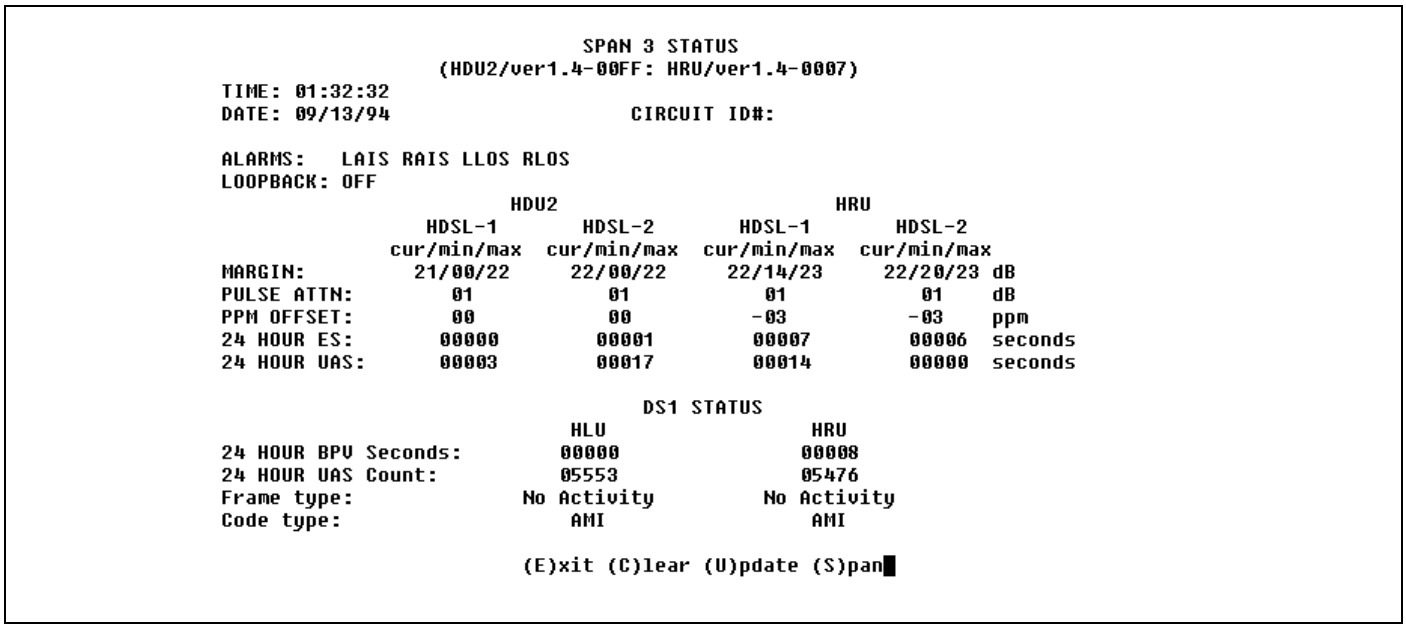

Figure 11. HLU Status Display, Span 3 (2 Doublers).

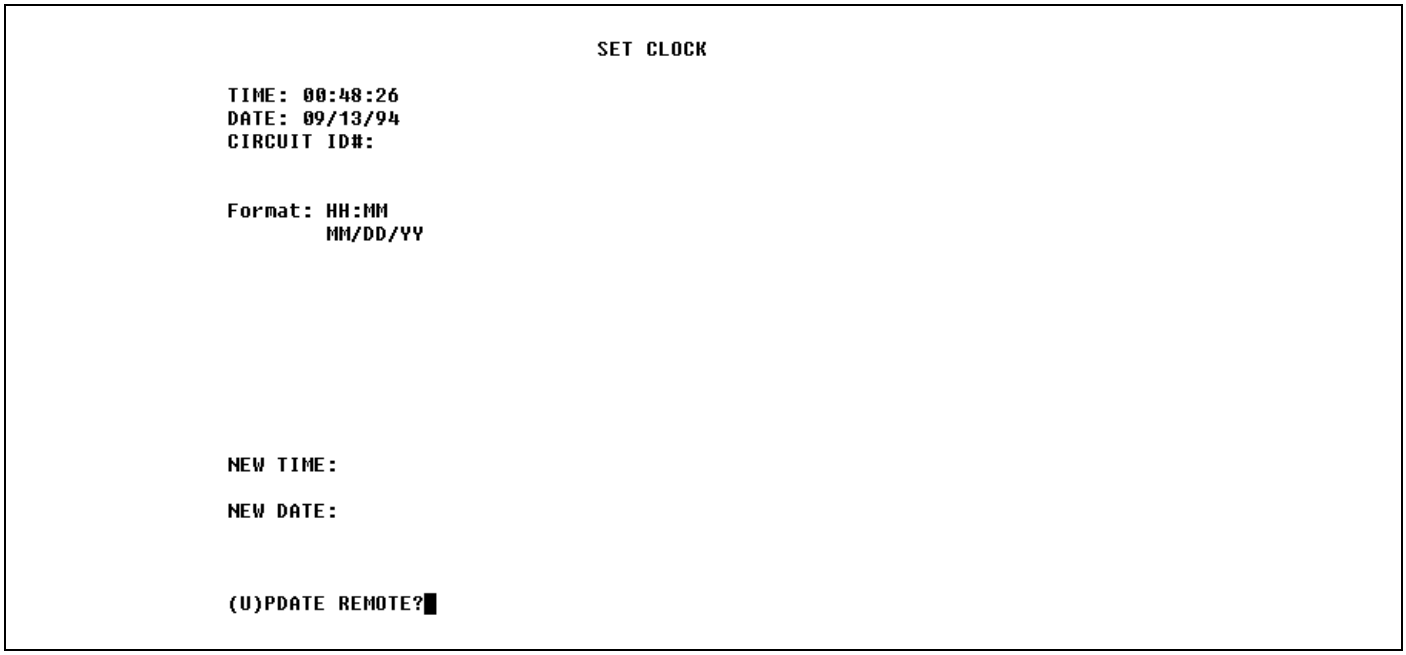

Figure 12. Set Clock Menu.

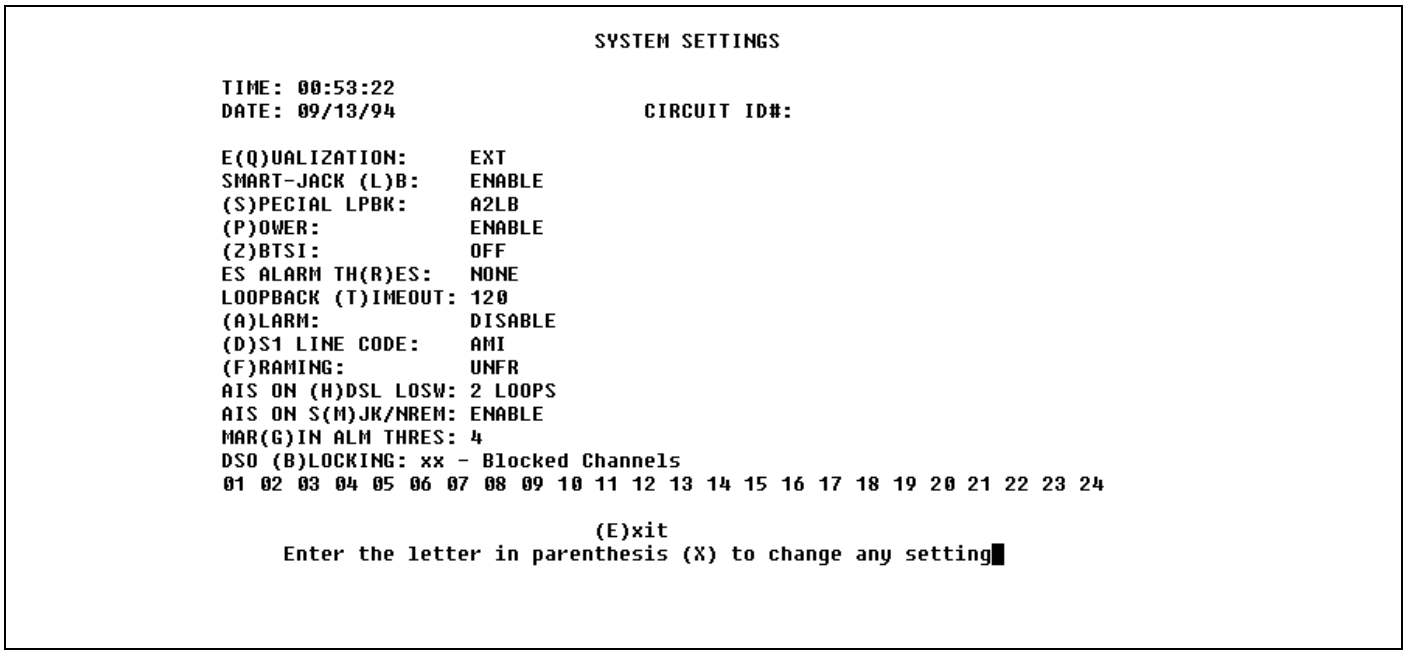

Figure 13. System Settings Menu.

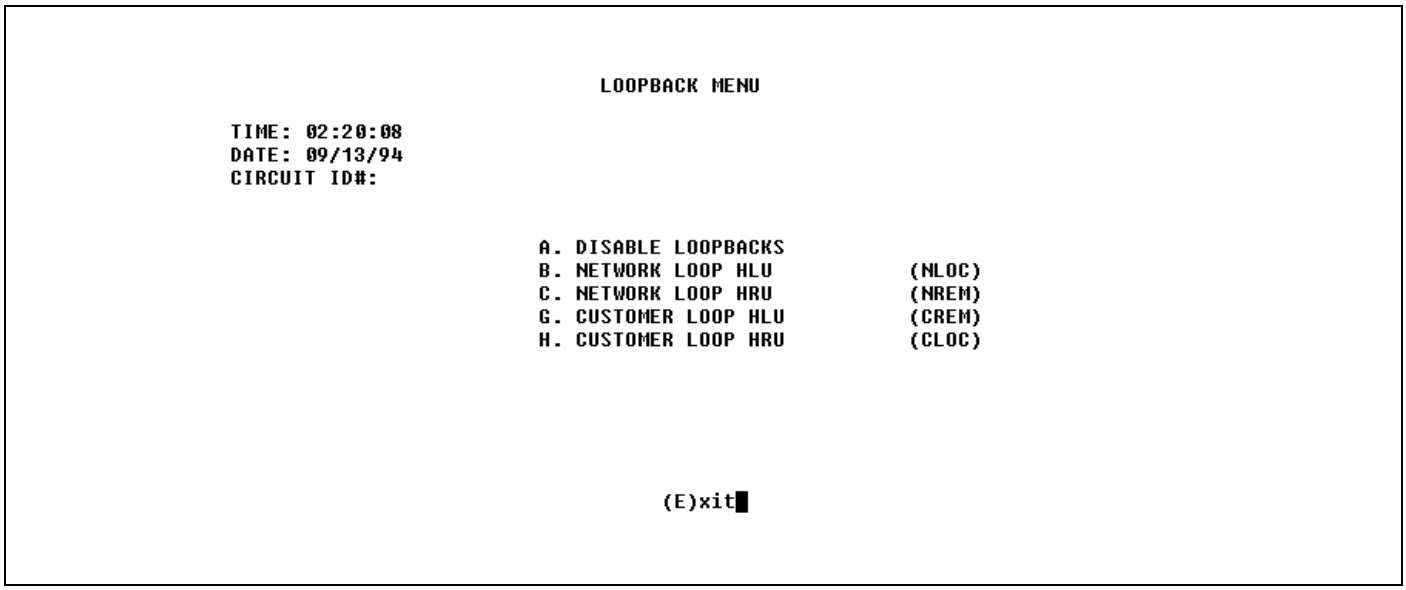

Figure 14. Loopback Menu (No Doublers).

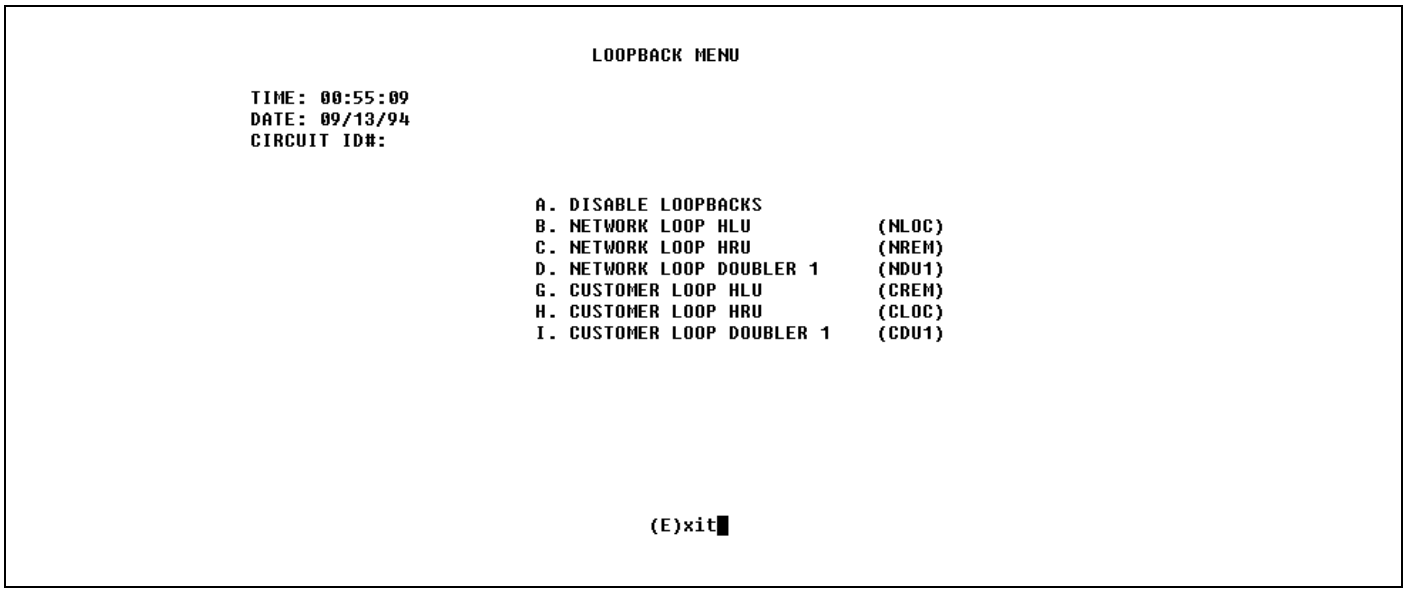

Figure 15. Loopback Menu (1 Doubler).

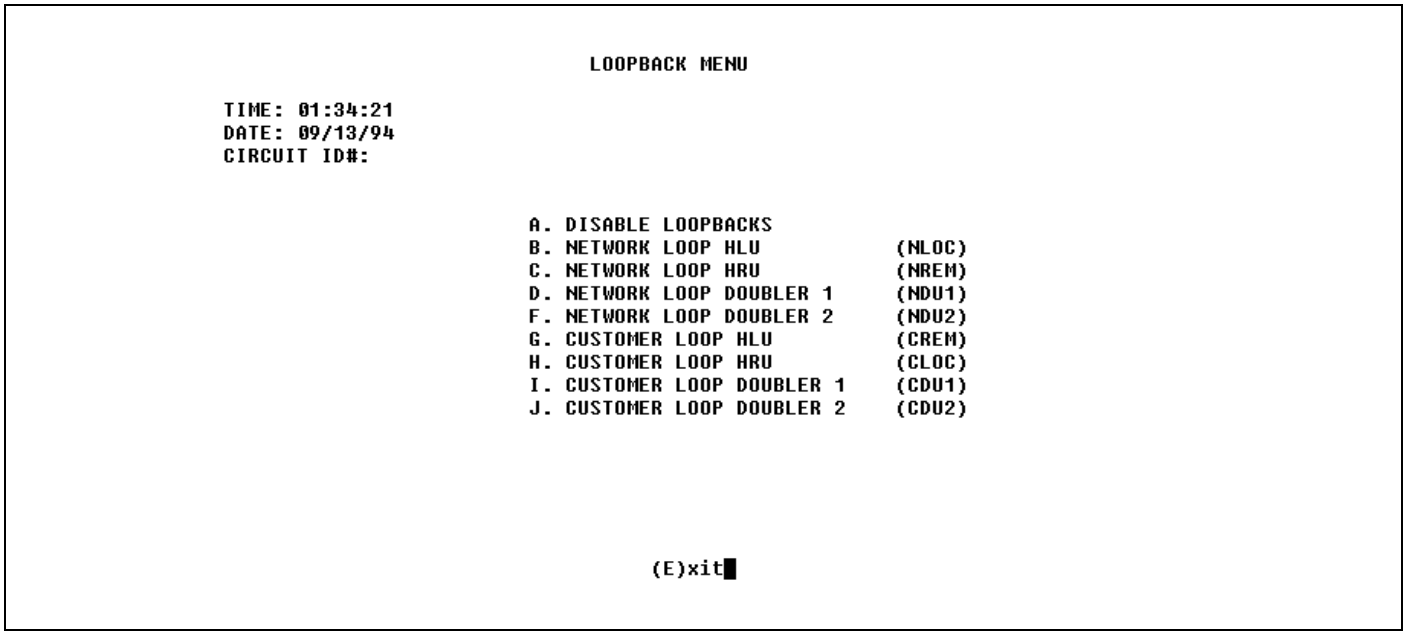

Figure 16. Loopback Menu (2 Doublers).

```
Date: 09/13/94            PERFORMANCE DATA
CIRCUIT ID#:
                  ERRORED SECONDS/UNAVAILABLE SECONDS

              DS1              HDSL-1             HDSL-2
            HLU      HRU      HLU      HRU      HLU      HRU
22:30    000/000  000/000  000/000  000/000  000/000  000/000
22:45    000/000  000/000  000/000  000/000  000/000  000/000
23:00    000/000  000/000  000/000  000/000  000/000  000/000
23:15    000/000  000/000  000/000  000/000  000/000  000/000
23:30    000/000  000/000  000/000  000/000  000/000  000/000
23:45    000/000  000/000  000/000  000/000  000/000  000/000
00:00    000/000  000/000  000/000  000/000  000/000  000/000
00:15    000/898  004/863  000/016  003/000  000/016  003/000
00:30    000/900  000/900  000/000  001/000  000/000  000/000
00:45    000/900  000/900  000/000  000/000  000/000  000/000
01:00    000/900  000/900  000/000  000/000  000/000  000/000
01:15    000/900  000/900  000/000  000/000  000/000  000/000
01:30    000/900  004/858  000/000  003/014  000/000  003/000
01:45    000/900  000/900  000/000  000/000  000/000  000/000
02:00    000/900  000/900  000/000  000/000  000/000  000/000
02:15    000/885  006/823  001/027  003/004  001/027  003/000

                    (E)xit (P)revious (N)ext
```

Figure 17. Performance Data (No Doublers).

```
Date: 09/13/94        SPAN 1 PERFORMANCE DATA
CIRCUIT ID#:
                  ERRORED SECONDS/UNAVAILABLE SECONDS

              DS1              HDSL-1             HDSL-2
            HLU      HRU      HLU      HDU1     HLU      HDU1
21:15    000/000  000/000  000/000  000/000  000/000  000/000
21:30    000/000  000/000  000/000  000/000  000/000  000/000
21:45    000/000  000/000  000/000  000/000  000/000  000/000
22:00    000/000  000/000  000/000  000/000  000/000  000/000
22:15    000/000  000/000  000/000  000/000  000/000  000/000
22:30    000/000  000/000  000/000  000/000  000/000  000/000
22:45    000/000  000/000  000/000  000/000  000/000  000/000
23:00    000/000  000/000  000/000  000/000  000/000  000/000
23:15    000/000  000/000  000/000  000/000  000/000  000/000
23:30    000/000  000/000  000/000  000/000  000/000  000/000
23:45    000/000  000/000  000/000  000/000  000/000  000/000
00:00    000/000  000/000  000/000  000/000  000/000  000/000
00:15    000/898  004/863  000/016  000/004  000/016  000/004
00:30    000/900  000/900  000/000  000/000  000/000  000/000
00:45    000/900  000/900  000/000  000/000  000/000  000/000
01:00    000/900  000/900  000/000  000/000  000/000  000/000

                    (E)xit (P)revious (N)ext (S)pan
```

Figure 18. Performance Data, Span 1 (1 or 2 Doublers).

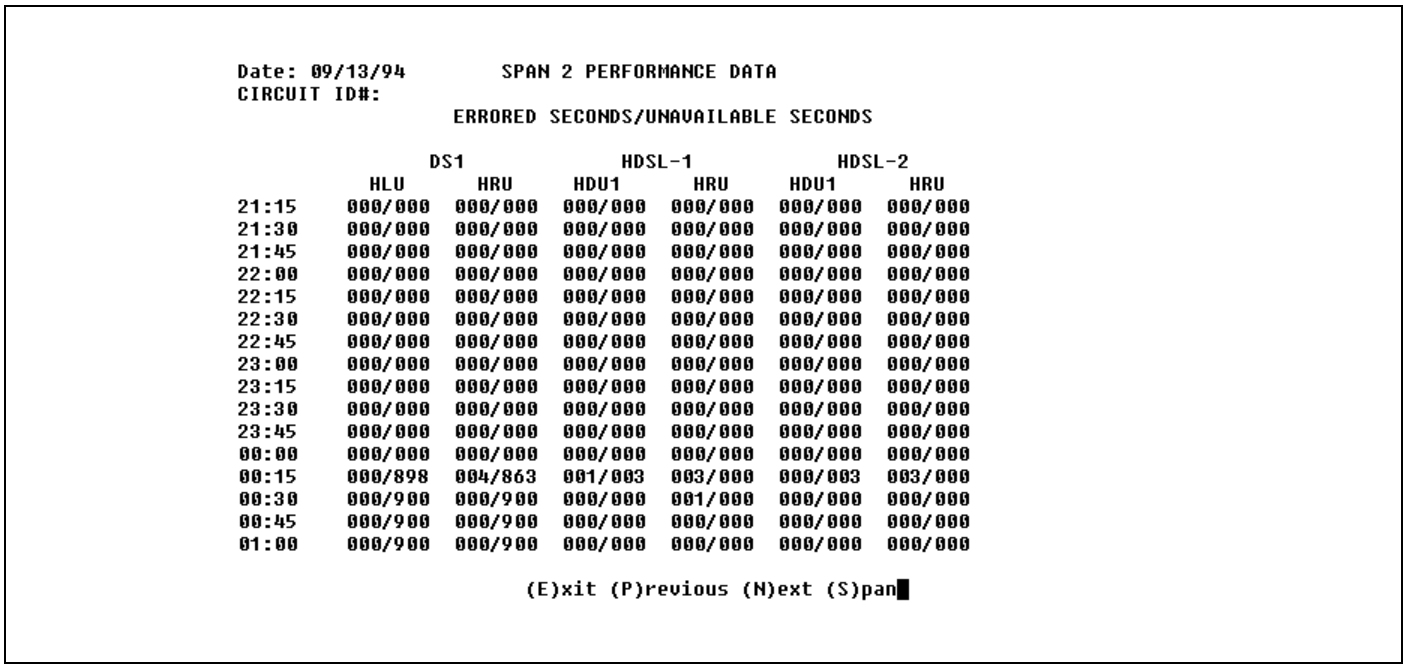

```
Date: 09/13/94        SPAN 2 PERFORMANCE DATA
CIRCUIT ID#:
                  ERRORED SECONDS/UNAVAILABLE SECONDS

                DS1              HDSL-1            HDSL-2
            HLU      HRU     HDU1      HRU     HDU1      HRU
21:15    000/000  000/000  000/000  000/000  000/000  000/000
21:30    000/000  000/000  000/000  000/000  000/000  000/000
21:45    000/000  000/000  000/000  000/000  000/000  000/000
22:00    000/000  000/000  000/000  000/000  000/000  000/000
22:15    000/000  000/000  000/000  000/000  000/000  000/000
22:30    000/000  000/000  000/000  000/000  000/000  000/000
22:45    000/000  000/000  000/000  000/000  000/000  000/000
23:00    000/000  000/000  000/000  000/000  000/000  000/000
23:15    000/000  000/000  000/000  000/000  000/000  000/000
23:30    000/000  000/000  000/000  000/000  000/000  000/000
23:45    000/000  000/000  000/000  000/000  000/000  000/000
00:00    000/000  000/000  000/000  000/000  000/000  000/000
00:15    000/898  004/863  001/003  003/000  000/003  003/000
00:30    000/900  000/900  000/000  001/000  000/000  000/000
00:45    000/900  000/900  000/000  000/000  000/000  000/000
01:00    000/900  000/900  000/000  000/000  000/000  000/000

                        (E)xit (P)revious (N)ext (S)pan
```

Figure 19. Performance Data, Span 2 (1 Doubler).

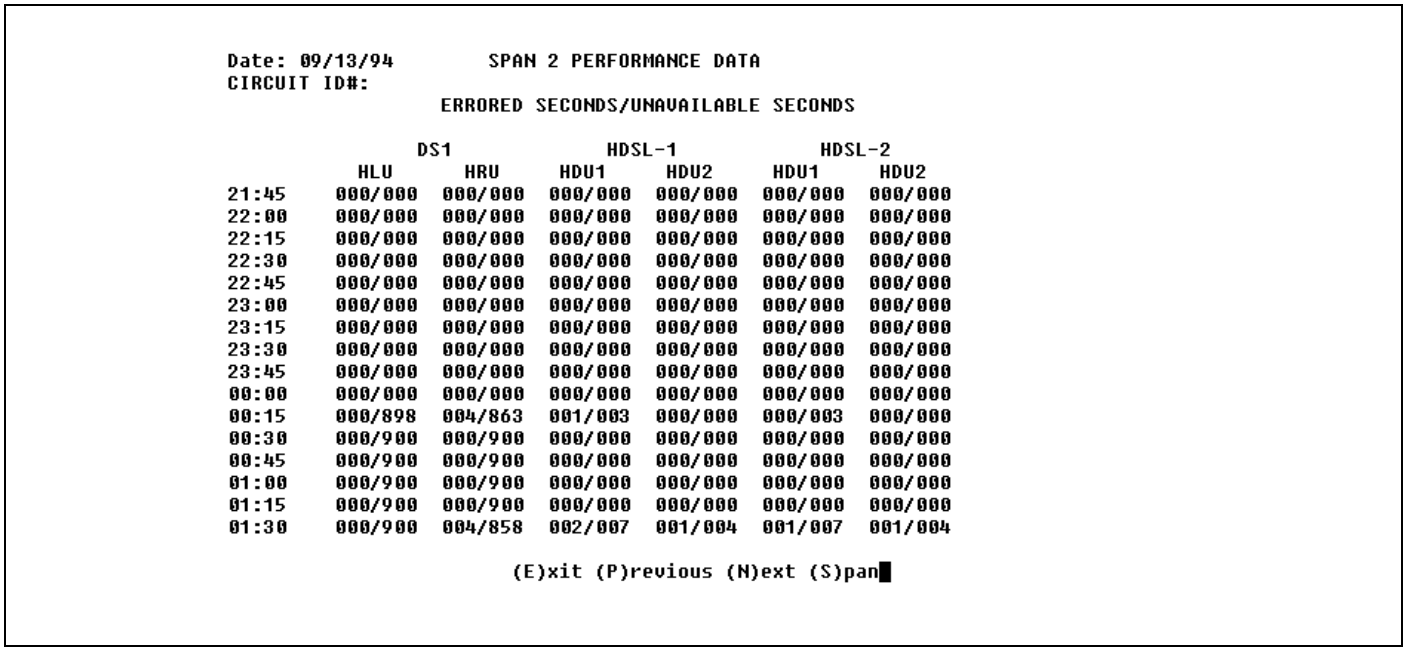

```
Date: 09/13/94        SPAN 2 PERFORMANCE DATA
CIRCUIT ID#:
                  ERRORED SECONDS/UNAVAILABLE SECONDS

                DS1              HDSL-1            HDSL-2
            HLU      HRU     HDU1      HDU2     HDU1      HDU2
21:45    000/000  000/000  000/000  000/000  000/000  000/000
22:00    000/000  000/000  000/000  000/000  000/000  000/000
22:15    000/000  000/000  000/000  000/000  000/000  000/000
22:30    000/000  000/000  000/000  000/000  000/000  000/000
22:45    000/000  000/000  000/000  000/000  000/000  000/000
23:00    000/000  000/000  000/000  000/000  000/000  000/000
23:15    000/000  000/000  000/000  000/000  000/000  000/000
23:30    000/000  000/000  000/000  000/000  000/000  000/000
23:45    000/000  000/000  000/000  000/000  000/000  000/000
00:00    000/000  000/000  000/000  000/000  000/000  000/000
00:15    000/898  004/863  001/003  000/000  000/003  000/000
00:30    000/900  000/900  000/000  000/000  000/000  000/000
00:45    000/900  000/900  000/000  000/000  000/000  000/000
01:00    000/900  000/900  000/000  000/000  000/000  000/000
01:15    000/900  000/900  000/000  000/000  000/000  000/000
01:30    000/900  004/858  002/007  001/004  001/007  001/004

                        (E)xit (P)revious (N)ext (S)pan
```

Figure 20. Performance Data, Span 2 (2 Doublers).

```
Date: 09/13/94        SPAN 3 PERFORMANCE DATA
CIRCUIT ID#:
                  ERRORED SECONDS/UNAVAILABLE SECONDS

              DS1             HDSL-1            HDSL-2
          HLU      HRU     HDU2      HRU     HDU2      HRU
21:45    000/000  000/000  000/000  000/000  000/000  000/000
22:00    000/000  000/000  000/000  000/000  000/000  000/000
22:15    000/000  000/000  000/000  000/000  000/000  000/000
22:30    000/000  000/000  000/000  000/000  000/000  000/000
22:45    000/000  000/000  000/000  000/000  000/000  000/000
23:00    000/000  000/000  000/000  000/000  000/000  000/000
23:15    000/000  000/000  000/000  000/000  000/000  000/000
23:30    000/000  000/000  000/000  000/000  000/000  000/000
23:45    000/000  000/000  000/000  000/000  000/000  000/000
00:00    000/000  000/000  000/000  000/000  000/000  000/000
00:15    000/898  004/863  000/000  003/000  000/000  003/000
00:30    000/900  000/900  000/000  001/000  000/000  000/000
00:45    000/900  000/900  000/000  000/000  000/000  000/000
01:00    000/900  000/900  000/000  000/000  000/000  000/000
01:15    000/900  000/900  000/000  000/000  000/000  000/000
01:30    000/900  004/858  000/003  003/014  001/017  003/000

                  (E)xit (P)revious (N)ext (S)pan
```

Figure 21. Performance Data, Span 3 (2 Doublers).

```
Time: 02:22:56                7 DAY HISTORY
CIRCUIT ID#:


                  ERRORED SECONDS/UNAVAILABLE SECONDS

              DS1                 HDSL-1              HDSL-2
          HLU         HRU         HLU         HRU         HLU         HRU
09/06  00000/00000 00000/00000 00000/00000 00000/00000 00000/00000 00000/00000
09/07  00000/00000 00000/00000 00000/00000 00000/00000 00000/00000 00000/00000
09/08  00000/00000 00000/00000 00000/00000 00000/00000 00000/00000 00000/00000
09/09  00000/00000 00000/00000 00000/00000 00000/00000 00000/00000 00000/00000
09/10  00000/00000 00000/00000 00000/00000 00000/00000 00000/00000 00000/00000
09/11  00000/00000 00000/00000 00000/00000 00000/00000 00000/00000 00000/00000
09/12  00000/00000 00000/00000 00000/00000 00000/00000 00000/00000 00000/00000
current 00000/08083 00014/07944 00001/00043 00010/00018 00001/00043 00009/00000

                  (E)xit
```

Figure 22. Performance Data History (No Doublers).

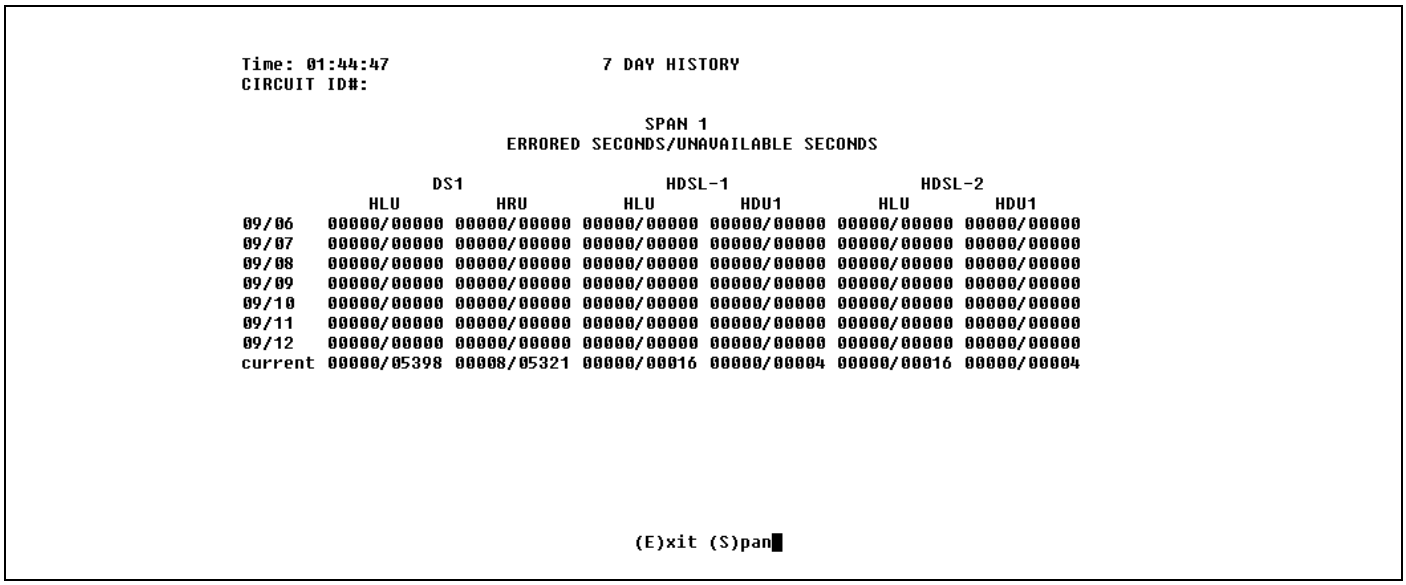

```
Time: 01:44:47                    7 DAY HISTORY
CIRCUIT ID#:

                                    SPAN 1
                         ERRORED SECONDS/UNAVAILABLE SECONDS

                 DS1                    HDSL-1                  HDSL-2
            HLU         HRU         HLU         HDU1         HLU         HDU1
09/06   00000/00000 00000/00000 00000/00000 00000/00000 00000/00000 00000/00000
09/07   00000/00000 00000/00000 00000/00000 00000/00000 00000/00000 00000/00000
09/08   00000/00000 00000/00000 00000/00000 00000/00000 00000/00000 00000/00000
09/09   00000/00000 00000/00000 00000/00000 00000/00000 00000/00000 00000/00000
09/10   00000/00000 00000/00000 00000/00000 00000/00000 00000/00000 00000/00000
09/11   00000/00000 00000/00000 00000/00000 00000/00000 00000/00000 00000/00000
09/12   00000/00000 00000/00000 00000/00000 00000/00000 00000/00000 00000/00000
current 00000/05398 00008/05321 00000/00016 00000/00004 00000/00016 00000/00004

                                    (E)xit (S)pan
```

Figure 23. Performance Data History, Span 2 (2 Doublers).

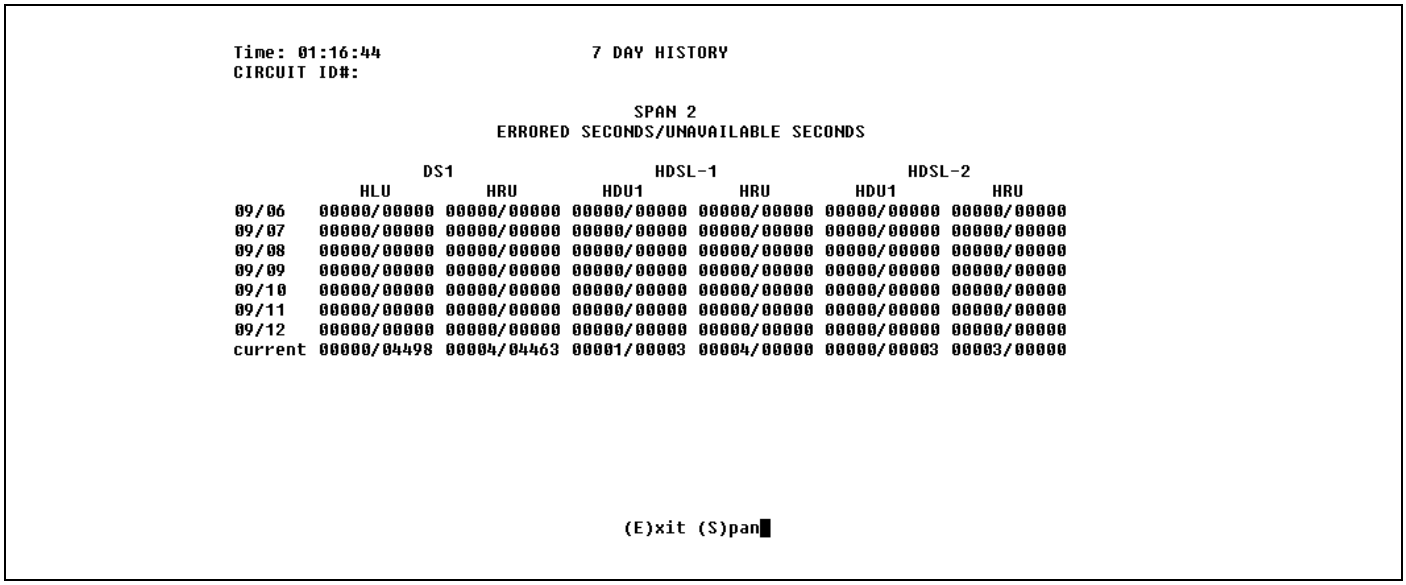

```
Time: 01:16:44                    7 DAY HISTORY
CIRCUIT ID#:

                                    SPAN 2
                         ERRORED SECONDS/UNAVAILABLE SECONDS

                 DS1                    HDSL-1                  HDSL-2
            HLU         HRU         HDU1         HRU         HDU1         HRU
09/06   00000/00000 00000/00000 00000/00000 00000/00000 00000/00000 00000/00000
09/07   00000/00000 00000/00000 00000/00000 00000/00000 00000/00000 00000/00000
09/08   00000/00000 00000/00000 00000/00000 00000/00000 00000/00000 00000/00000
09/09   00000/00000 00000/00000 00000/00000 00000/00000 00000/00000 00000/00000
09/10   00000/00000 00000/00000 00000/00000 00000/00000 00000/00000 00000/00000
09/11   00000/00000 00000/00000 00000/00000 00000/00000 00000/00000 00000/00000
09/12   00000/00000 00000/00000 00000/00000 00000/00000 00000/00000 00000/00000
current 00000/04498 00004/04463 00001/00003 00004/00000 00000/00003 00003/00000

                                    (E)xit (S)pan
```

Figure 24. Performance Data History, Span 2 (1 Doubler).

```
Time: 01:50:17                    7 DAY HISTORY
CIRCUIT ID#:

                                    SPAN 2
                         ERRORED SECONDS/UNAVAILABLE SECONDS

                 DS1                    HDSL-1                  HDSL-2
            HLU         HRU        HDU1        HDU2        HDU1        HDU2
09/06   00000/00000 00000/00000 00000/00000 00000/00000 00000/00000 00000/00000
09/07   00000/00000 00000/00000 00000/00000 00000/00000 00000/00000 00000/00000
09/08   00000/00000 00000/00000 00000/00000 00000/00000 00000/00000 00000/00000
09/09   00000/00000 00000/00000 00000/00000 00000/00000 00000/00000 00000/00000
09/10   00000/00000 00000/00000 00000/00000 00000/00000 00000/00000 00000/00000
09/11   00000/00000 00000/00000 00000/00000 00000/00000 00000/00000 00000/00000
09/12   00000/00000 00000/00000 00000/00000 00000/00000 00000/00000 00000/00000
current 00000/06298 00008/06221 00003/00010 00001/00004 00001/00010 00001/00004

                                    (E)xit (S)pan
```

Figure 25. Performance Data History, Span 2 (2 Doublers).

```
Time: 01:51:23                    7 DAY HISTORY
CIRCUIT ID#:

                                    SPAN 3
                         ERRORED SECONDS/UNAVAILABLE SECONDS

                 DS1                    HDSL-1                  HDSL-2
            HLU         HRU        HDU2        HRU        HDU2        HRU
09/06   00000/00000 00000/00000 00000/00000 00000/00000 00000/00000 00000/00000
09/07   00000/00000 00000/00000 00000/00000 00000/00000 00000/00000 00000/00000
09/08   00000/00000 00000/00000 00000/00000 00000/00000 00000/00000 00000/00000
09/09   00000/00000 00000/00000 00000/00000 00000/00000 00000/00000 00000/00000
09/10   00000/00000 00000/00000 00000/00000 00000/00000 00000/00000 00000/00000
09/11   00000/00000 00000/00000 00000/00000 00000/00000 00000/00000 00000/00000
09/12   00000/00000 00000/00000 00000/00000 00000/00000 00000/00000 00000/00000
current 00000/06298 00008/06221 00000/00003 00007/00014 00001/00017 00006/00000

                                    (E)xit (S)pan
```

Figure 26. Performance Data History, Span 3 (2 Doublers).

```
                              ALARM HISTORY

TIME: 02:24:22
DATE: 09/13/94
CIRCUIT ID#:

Type              First               Last                Current        Count
LOS, DS1-HLU      09/13/94-00:00      09/13/94-00:00      ALARM          001
LOS, DS1-HRU      09/13/94-00:00      09/13/94-02:05      ALARM          008
LOSW, HDSL1       09/13/94-00:00      09/13/94-02:02      OK             002
LOSW, HDSL2       09/13/94-00:00      09/13/94-02:02      OK             002
ES, HDSL1                                                 OK             000
ES, HDSL2                                                 OK             000
MARGIN L1         09/13/94-00:00      09/13/94-00:00      OK             001
MARGIN L2         09/13/94-00:00      09/13/94-00:00      OK             001
PWR-OPEN          09/13/94-02:02      09/13/94-02:02      OK             001
PWR-SHRT          09/13/94-00:00      09/13/94-00:00      OK             001

LAST CLEARED:  NONE

                          (E)xit (C)lear (U)pdate
```

Figure 27. HLU Alarm History (No Doublers).

```
                              ALARM HISTORY

TIME: 01:19:37
DATE: 09/13/94
CIRCUIT ID#:

Type              First               Last                Current        Count
LOS, DS1-HLU      09/13/94-00:00      09/13/94-00:00      ALARM          001
LOS, DS1-HRU      09/13/94-00:00      09/13/94-00:00      ALARM          001
SPAN1 LOSW, HDSL1 09/13/94-00:00      09/13/94-00:00      OK             001
SPAN1 LOSW, HDSL2 09/13/94-00:00      09/13/94-00:00      OK             001
SPAN1 ES, HDSL1                                           OK             000
SPAN1 ES, HDSL2                                           OK             000
SPAN1 MARGIN L1   09/13/94-00:00      09/13/94-00:00      OK             001
SPAN1 MARGIN L2   09/13/94-00:00      09/13/94-00:00      OK             001
PWR-OPEN                                                  OK             000
PWR-SHRT          09/13/94-00:00      09/13/94-00:00      OK             001

LAST CLEARED:  NONE

                      (E)xit (C)lear (U)pdate (S)pan
```

Figure 28. HLU Alarm History, Span 1 (1 or 2 Doublers).

```
                                ALARM HISTORY

TIME: 01:21:14
DATE: 09/13/94
CIRCUIT ID#:

Type              First               Last                Current        Count
LOS, DS1-HLU      09/13/94-00:00      09/13/94-00:00      ALARM          001
LOS, DS1-HRU      09/13/94-00:00      09/13/94-00:00      ALARM          001
SPAN2 LOSW, HDSL1 09/13/94-00:00      09/13/94-00:00      OK             001
SPAN2 LOSW, HDSL2 09/13/94-00:00      09/13/94-00:00      OK             001
SPAN2 ES, HDSL1                                           OK             000
SPAN2 ES, HDSL2                                           OK             000
SPAN2 MARGIN L1   09/13/94-00:00      09/13/94-00:00      OK             001
SPAN2 MARGIN L2   09/13/94-00:00      09/13/94-00:00      OK             001
PWR-OPEN                                                  OK             000
PWR-SHRT          09/13/94-00:00      09/13/94-00:00      OK             001

LAST CLEARED:  NONE


                          (E)xit (C)lear (U)pdate (S)pan
```

Figure 29. HLU Alarm History, Span 2 (1 or 2 Doublers).

```
                                ALARM HISTORY

TIME: 01:55:11
DATE: 09/13/94
CIRCUIT ID#:

Type              First               Last                Current        Count
LOS, DS1-HLU      09/13/94-00:00      09/13/94-00:00      ALARM          001
LOS, DS1-HRU      09/13/94-00:00      09/13/94-01:25      ALARM          002
SPAN3 LOSW, HDSL1 09/13/94-01:24      09/13/94-01:24      OK             001
SPAN3 LOSW, HDSL2 09/13/94-01:24      09/13/94-01:24      OK             001
SPAN3 ES, HDSL1                                           OK             000
SPAN3 ES, HDSL2                                           OK             000
SPAN3 MARGIN L1   09/13/94-01:25      09/13/94-01:25      OK             001
SPAN3 MARGIN L2   09/13/94-01:25      09/13/94-01:25      OK             001
PWR-OPEN                                                  OK             000
PWR-SHRT          09/13/94-00:00      09/13/94-00:00      OK             001

LAST CLEARED:  NONE


                          (E)xit (C)lear (U)pdate (S)pan
```

Figure 30. HLU Alarm History, Span 3 (2 Doublers).