HIGAIN™ LINE UNIT
MODEL HLU-388

List #	Part Number	CLEI Code
2D	150-1141-24	T1L2BBBAAA

CONTENTS **PAGE**

A. PRODUCT OVERVIEW

1. DESCRIPTION AND FEATURES 2
2. HIGAIN SYSTEM APPLICATIONS 2
3. FUNCTIONAL OPERATION 3
4. ALARMS 4
5. SYSTEM OPTIONS 6
6. HDSL LINE VOLTAGE OPTION 10
7. INSTALLATION 10
8. SPECIFICATIONS 11
9. CERTIFICATION 11
10. WARRANTY 12
11. TECHNICAL ASSISTANCE 12

B. APPLICATIONS WITHOUT HIGAIN DOUBLERS (HDU-451)

12. SECTION INTRODUCTION 13
13. POWER CONSUMPTION 13
14. LOOPBACK OPERATION 14
15. TESTING 15
16. SYSTEM MAINTENANCE MENU SCREENS 28

C. APPLICATIONS USING HIGAIN DOUBLERS (HDU-451)

17. DOUBLER DEPLOYMENT RULES 36
18. POWER CONSUMPTION 36
19. LOOPBACK OPERATION 37
20. TESTING 39
21. SYSTEM MAINTENANCE MENU SCREENS 50

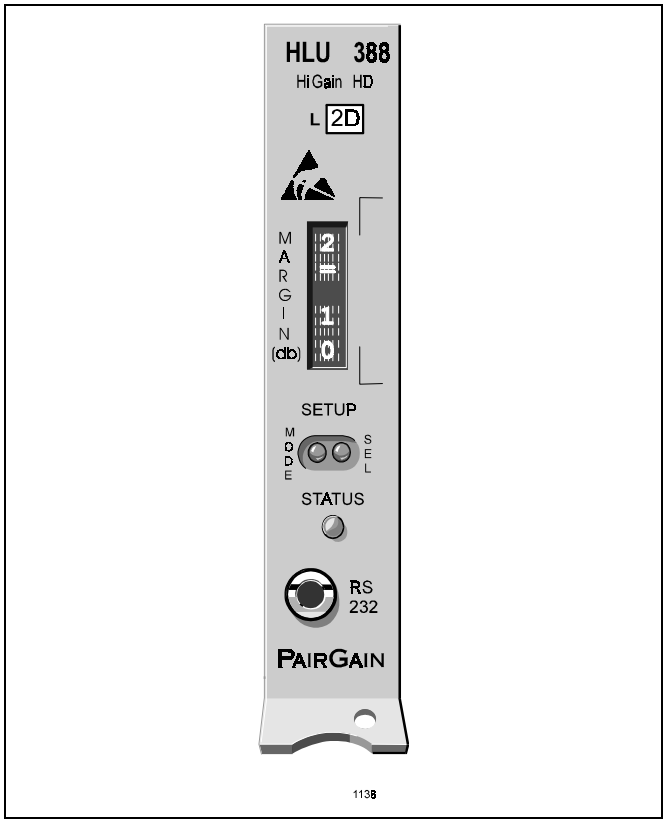

Figure 1. HLU-388, List 2D Front Panel. The PairGain HLU-388 is the local unit used in conjunction with the HRU-412 remote unit to provide a complete HiGain HDSL system.

CAUTION

This product incorporates static sensitive components. Proper electrostatic discharge procedures must be followed.

A. PRODUCT OVERVIEW

1. DESCRIPTION AND FEATURES

1.01 PairGain's HiGain Line Unit Model HLU-388, List 2D (see Figure 1) is the Central Office side of a repeaterless T1 transmission system. When used in conjunction with an HRU-412 HiGain Remote Unit, the system provides 1.544 Mbps transmission on two unconditioned copper pairs over the full Carrier Serving Area (CSA) range. The use of doublers extends the range up to 36,000 feet of AWG 24. The CSA includes loops which are up to 12,000 feet of AWG 24 or 9,000 feet of AWG 26 wire, including bridged taps. The HiGain system uses HDSL (High bit rate Digital Subscriber Line) transmission technology as recommended by Bellcore TA-TSY-001210. HiGain complies with TR-TSY-000063 (Network Equipment Building System (NEBS) Generic Equipment requirements) and TR-TSY-000499 (Transport System Generic Requirements—TSGR) common requirements.

1.02 The HLU-388 is compatible with the following T1 repeater shelves:

23" Shelf

a) Larus FT2 1188 (28 slot connectorized).

b) AT&T DS1 Ext. (28 slot connectorized).

19" Shelf

a) Larus FT2 1187 (20 slot connectorized).

23" Cabinet Distant Terminal

a) Larus FT2 1190 (12 slots) for 51A cabinet mount.

1.03 Revision History of this practice.

Revision 01—June 21, 1996

a) Initial release.

1.04 HLU-388, List 2D features:

- Selectable DS-1 pre-equalizer
- 130 to 200 Vdc HDSL line power for doubler and HRU-412
- Optional bipolar (±65 or ±100 Vdc) or unipolar (-130 or -200 Vdc) HDSL line power voltage via switch S2
- Front panel HDSL S/N margin display
- Compatible with Span Terminating Shelf (STS) high density shelves
- Selectable loopback activation codes
- RS-232 maintenance port
- Compatible with PairGain Management System
- Non-volatile front panel operator setup
- Lightning and power cross protection on HDSL interfaces
- 784 kbps full duplex 2B1Q HDSL transmission on two pairs
- Front panel status indicating LED
- On / Off front panel display power cycling
- DS1 LOS detector (125 consecutive zeros)
- Margin threshold alarm
- HDSL AIS and Smart-Jack AIS options
- Easy return to factory default user settings
- Circuit ID option
- 30% less power consumption than List 1

2. HIGAIN SYSTEM APPLICATIONS

2.01 The HiGain system provides a cost-effective, easy-to-deploy method for delivering T1 High Capacity Digital Service (HCDS) over metallic pairs. The fiber-like quality service is deployed over two unconditioned, non-loaded copper pairs. Conventional in-line T1 repeaters are not required. Cable pair conditioning, pair separation and bridged tap removal are not required.

2.02 The general guidelines require that each loop have less than 35 dB of loss at 196 kHz, with 135 ohms driving and terminating impedances. The HiGain system operates with any number of other T1, POTS, Digital Data Service (DDS), or other HiGain systems sharing the same cable binder group. HiGain systems can be used with customers requiring DS1 service on a temporary or permanent basis. The HiGain system also provides a means of quickly deploying service in advance of fiber-optic transmission systems. With the HiGain system, service can be provided within hours. Fiber optic systems can be installed at a leisurely pace and cut over from the installed HiGain system when convenient to do so. The installed HiGain system can then be easily removed and utilized elsewhere.

3. FUNCTIONAL OPERATION

3.01 The HiGain system utilizes PairGain 2-Bit 1-Quartenary (2B1Q) HDSL transceiver systems to establish two full duplex 784 kbps data channels between the HLU-388, List 2D and a remotely mounted HRU-412 HiGain Remote Unit. This provides a total capacity of 1.568 Mbps between the two units.

3.02 A block diagram of the HLU-388, List 2D is shown in Figure 2. The HiGain HLU-388, List 2D receives a 1.544 Mbps DS1 data stream from the DSX-1 digital cross connect interface. The HLU-388, List 2D contains a DSX-1 frame synchronizer controlled by an 8-bit microprocessor that determines the type of framing on the DS1 stream and synchronizes to it. The HLU-388, List 2D recognizes Super Frame (SF) (including D4) or Extended Super Frame (ESF) framing. When the data is unframed, the HLU-388, List 2D arbitrarily defines a frame bit.

3.03 The HLU-388, List 2D contains a multiplexer that generates two parallel 784 kbps data streams. The data streams contain HDSL frames that are nominally 4704 bits (6 milliseconds) in length. The HDSL frames contain a 14-bit Frame Sync Word (FSW), 6-bit Cyclic Redundancy Check (CRC), 21-bit operations channel and DSX-1 payload. The DSX-1 stream is separated into two parallel streams that comprise the payloads of the HDSL channels. The HLU-388, List 2D allocates the DS0 time slots according to the version of HRU-412 to which it is connected. Older version HRUs require the odd DS0 time slots allocated to loop 1 and the even DS0 time slots to loop 2. Newer versions allocated DS0 time slots 1 through 12 to loop 1, and time slots 13 through 24 to loop 2. The 8 kbps frame bits of the DSX-1 stream are included on both HDSL channels. The two formatted HDSL channels are passed to the HDSL transceivers which convert them to the 2B1Q format on the HDSL lines. The 2B1Q line code is designed to operate in a full-duplex mode on unconditioned pairs. The transceiver echo canceler and adaptive equalizer receive the signal from the remote end in the presence of impairments and noise on the copper pairs.

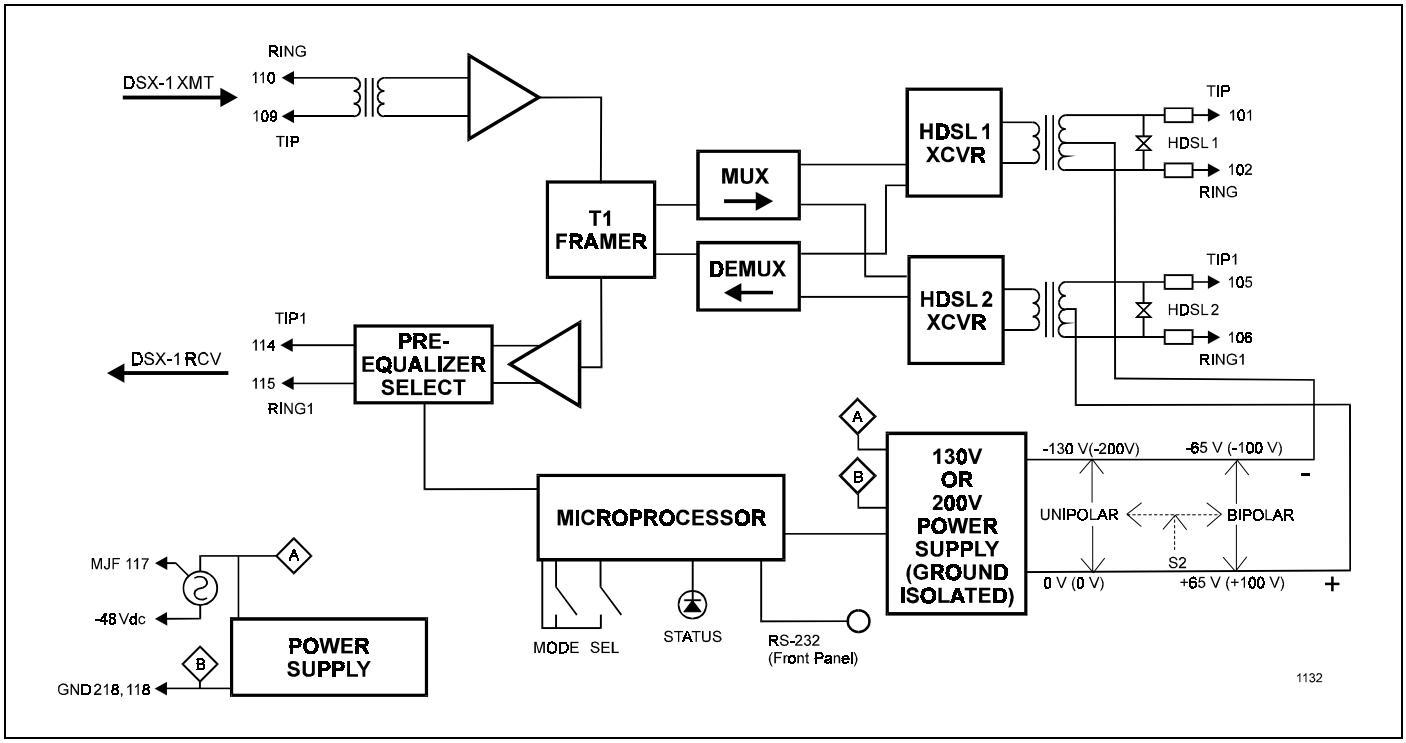

Figure 2. HLU-388, List 2D Block Diagram. PairGain's HDSL technology provides full duplex services at standard T-1 rates over copper wires between an HLU and an HRU, which comprise one HiGain system.

3.04 The received HDSL channels are processed by the transceiver and then passed on to the HLU-388, List 2D demultiplexer module. The demultiplexer provides frame synchronization for each of the two HDSL loops. The demultiplexer and HDSL transceivers work under control of the HLU-388, List 2D microprocessor and compensate for data inversions caused by tip-ring reversals and loop swaps caused by pair reversals. The HiGain system allows for tip-ring or pair reversals, but does not tolerate split pairs. By synchronizing to the Frame Sync Word (FSW) of each loop, the demultiplexer can reconstruct the original 1.544 Mbps DS1 stream from the payloads of the two HDSL loops. The CRC fields on the HDSL streams allow the HLU-388, List 2D to determine if errors are present on the channel due to excessive impairments on the HDSL pairs or excessive impulse or crosstalk noise.

3.05 The demultiplexer removes data link messages from the HDSL loops and passes them to the microprocessor. This mechanism allows operations messages and status to be exchanged between the HLU-388, List 2D and the HRU-412 remote unit.

3.06 The reconstructed HDSL data is buffered in a first-in-first-out (FIFO) buffer within the demultiplexer. A frequency synthesizer, in conjunction with the FIFO, regulates the output bit rate and reconstructs the DSX-1 clock at the exact rate received from the remote end. The HiGain system operates at T1 rates of 1.544 Mbps with up to ± 200 bps of offset.

3.07 A DSX-1 interface driver converts the input data to an Alternate Mark Inversion (AMI) or Binary Eight Zero Substitution (B8ZS) format. The DSX-1 equalizer is programmable to five different lengths, as determined by the distance between the HLU-388, List 2D and the DSX-1 interface. This provides CB-119 specification compliant pulses at the DSX-1 interface over a range of 0 to 655 feet of ABAM-specification cable.

3.08. The HLU-388, List 2D contains two separate power converters. The main power supply converts -48 Vdc local battery to logic power for the HLU-388, List 2D circuits. The line power supply converts the -48 Vdc battery to either 130 Vdc (for non-doubler applications) or 200 Vdc (for doubler applications), then provides simplex power feed on the two HDSL line interfaces. Switch S2 allows the user to configure the HDSL line powering voltage to be unipolar (0 to -130 V and 0 to -200 V) or bipolar (± 65 V and ± 100 V) (see Figure 5.) The line power supply can be turned on or off by the microprocessor and is automatically shut down in the presence of line short circuits or microprocessor failure.

3.09 A 3-pin miniature 210 Bantam type connector jack (Figure 3), is provided on the front panel of the HLU-388. This connector provides access to HiGain's maintenance, provisioning and performance monitoring interface via a RS-232 interface configured as Data Communications Equipment (DCE). A 210 to DB-9 female adapter is provided with every unit to facilitate the use of standard RS-232, DB-9 cables. This connector provides asynchronous access to the HiGain system maintenance provisioning and performance monitoring firmware. The port is configured as DCE with 8 data bits, 1 stop bit and no parity. Operator interaction with the firmware is via an ASCII terminal or a Personal Computer with asynchronous communication software. Striking the **Space** bar several times enables the HLU-388, List 2D to automatically match the terminal line baud rate, from 1200 to 9600 baud. Figure 7 through Figure 14 show the menu selections available from the terminal for non-doubler applications. Figure 16 through Figure 34 show the menu selections available from the terminal for doubler applications. Table 8 defines the terms used in the non-doubler System Status screen. Table 18 defines the terms for the doubler System Status screens.

4. ALARMS

4.01 The HLU-388 generates an Alarm message on its front panel display for any of the alarm conditions listed below. The front panel message which accompanies each alarm condition is listed in bold letters. Since more than one alarm condition can exist at any given time but only one message can be displayed, the alarms are listed in order of priority. Only the highest priority alarm is displayed if more than one alarm condition exists. The ALRM message precedes every specific alarm condition display.

1. **ALRM LOSW:** Either HDSL loop lost sync
2. **ALRM LLOS:** Loss of HLU DSX-1 input signal
3. **ALRM RLOS:** Loss of HRU DSX-1 input signal
4. **ALRM TLOS:** A user option that causes the loss of the HRU DS1 input from the CI to initiate a logic loopback in the HRU.
5. **ALRM H1ES:** HDSL loop 1 has exceeded the 24-hour user-selected Errored Seconds CRC threshold. If both H1ES and H2ES occur, only H1ES is displayed on the front panel.
6. **ALRM H2ES:** HDSL loop 2 has exceeded the 24-hour user-selected Errored Seconds CRC threshold. If both H1ES and H2ES occur, only H1ES is displayed on the front panel.
7. **ALRM DS1:** The total number of bipolar violations (BPV), at either the HLU or the

HRU DS1 inputs, have exceeded the 24-hour user-selected threshold.

8. **ALRM MAL1:** The margin on HDSL loop 1 has dropped below the minimum threshold value set by the RS-232 terminal Margin Alarm Threshold; as described in Section 5.
9. **ALRM MAL2:** The margin on HDSL loop 2 has dropped below the minimum threshold value set by the RS-232 terminal Margin Alarm Threshold; as described in Section 5.

4.02 The HLU-388's Status LED flashes red for the duration of a minor alarm condition. Alarms 4 and 5 can be inhibited by selecting "**None**" for the ESAL system option (see Section 5 for System Settings information). The MAL(X) alarm can be DISabled by setting the margin alarm threshold to **0**. The minor alarm can be retired by executing the Alarm CutOff (ACO) option. This is accomplished by pressing the **SEL** button on the front panel. This turns the alarm off and replaces the ALRM message with the ACO message. However, the second part of the ALRM message, which defines the cause of the alarm, remains. Both messages remain until the alarm condition clears or another alarm occurs. Disabling the ALM also retires an ACO condition.

4.03 Pin 117, MJF, is driven to -48 VDC and the front panel STATUS LED turns red whenever the on board fuse opens. It emulates the function of the MJF output from Pin 117 of normal high density DDM+ repeaters. Its normally floating output must never be driven above ground or below -80 VDC. It can sink a current of 10 mA.

4.04 Pin (TBD) is the NMA serial bus. It is provided for access to the HMU-388 shelf controller card that will provide shelf management.

4.05 The HLU-388's front panel tri-color Status LED has the following states:

- GREEN - Normal Operation
- FLASHING GREEN - HDSL Acquisition
- FLASHING RED - Minor Alarm (for conditions, see paragraph 4.02 above.)
- RED - Fuse Alarm
- YELLOW - Self-test in process or an HLU Loopback in effect (CREM or NLOC)
- FLASHING YELLOW - HLU in Armed state

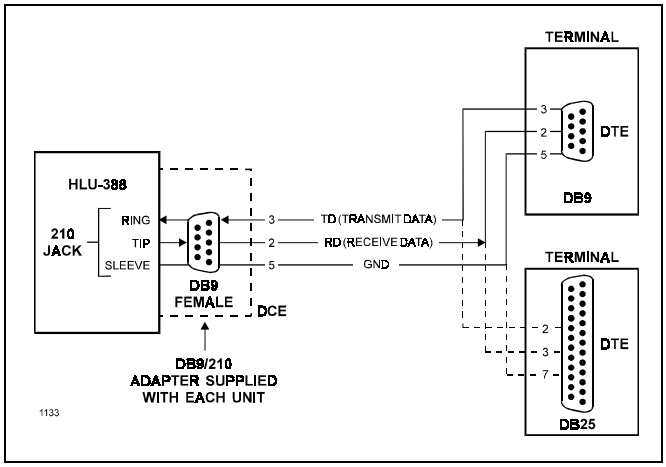

Figure 3. RS-232 I/O Pin-Outs. A 210 Bantam connector jack on the front panel provides access to the menu interface of the HLU-388.

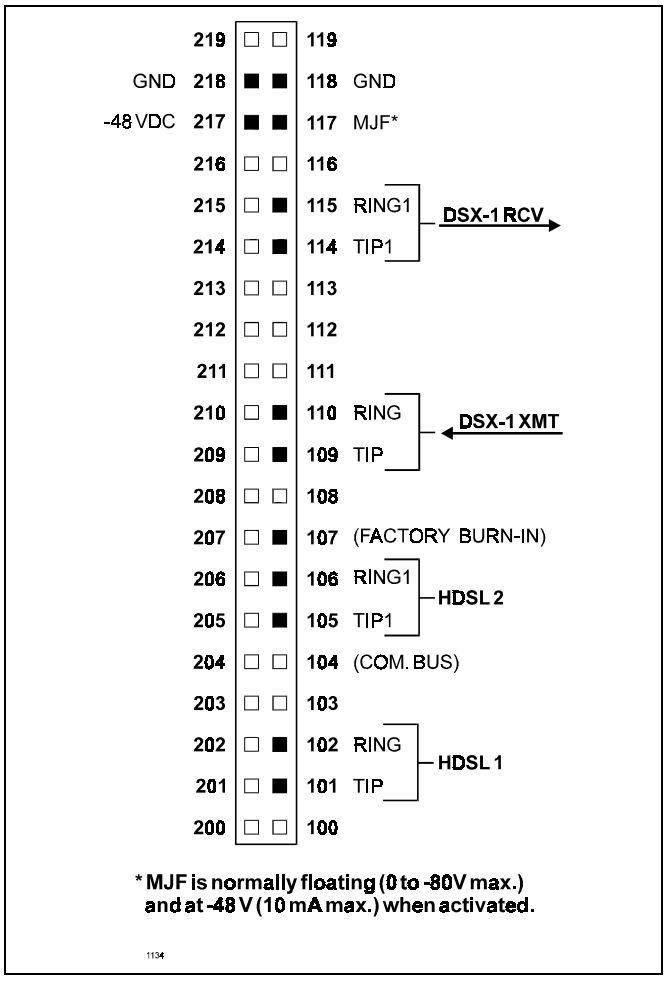

Figure 4. HLU-388, List 2D Card-Edge Connectors. The active pins are highlighted in black in the above illustration.

5. SYSTEM OPTIONS

5.01 The HLU-388, List 2D contains a non-volatile RAM (NVRAM) which stores the system options settings. No dip-switches or jumpers are required to configure these system options. They are set via push buttons on the front panel or through the RS-232 interface or from the Network Management interface. The System Settings are retained if shelf power is lost or if the HLU-388, List 2D is unplugged. Table 1 lists the HLU-388, List 2D System Options. Figure 10 and Figure 22 illustrate the same options on the HLU-388, List 2D non-doubler and doubler System Settings Menu screens, respectively. In the System Settings Menu (which is identical for both non-doubler and doubler applications), the settings shown represent the factory default settings.

5.02 The Setup momentary push buttons (Mode and SEL) are used to set the options from the HLU-388, List 2D front panel. To initiate the Options Setting mode, press the **Mode** button, for at least one second, but less than three seconds, and release. The message displayed on the front panel alternates between the first system parameter and its current setting. Pressing the **SEL** button scrolls the display (one at a time) through all possible settings of the parameter being displayed. After the desired setting has been selected, press the **Mode** button. This updates the currently displayed mode to the selected setting, then selects the next configurable parameter. After the last parameter has been selected, the display shows "CONF NO (Confirm? (Yes/No))." If the **Mode** button is pressed at this time, none of the changed parameters are installed. If the **SEL** button is pressed, a "YES" message is displayed, and the selected changes are installed. In either case, the display returns to its normal mode. The display also returns to its normal mode, without installing any new changes, if, after 30 seconds, neither button is pressed.

5.03 All 14 user options can be set to the factory default values by pressing the **SEL** button for six seconds until the message "DFLT NO" appears. To set the default values, press the **SEL** button while the "DFLT NO" message is displayed. "DFLT YES" will be displayed, indicating the factory default values are now in effect. To terminate the Default mode, without setting the factory default values, press the **Mode** button or do nothing for 30 seconds. The latter returns the display to its normal state.

5.04 Pressing the **Mode** button for three or more seconds causes the display to scroll through the HLU-388, List 2D software version number, its list number, the type of frame pattern being received from the DSX-1, the line code setting of the HLU-388, List 2D, and all 14 options settings. The line code parameter is the actual DS1 line code being received by the HLU-388, List 2D when the DS1 code pattern is set to **Auto**. Otherwise, the line code parameter mimics either of the other two line code settings, AMI or B8ZS, and is not determined by the received line code.

5.05 The DS1 line code option should always be set to conform to the type of T1 service (AMI or B8ZS) being provided by the HiGain system. The Auto mode, which can adapt to either AMI or B8ZS, should only be used in applications that require it (such as when HiGain acts as a standby circuit to T1 circuits whose line codes are not known or may be both AMI and B8ZS), because it has the following two limitations:

1. The Auto mode induces one BPV in the T1 bit stream whenever it switches from AMI to B8ZS.
2. The Auto mode allows each HiGain end (HLU and HRU) to set its DS1 mode to the code it is receiving at its local T1 input port. This makes each unit's code independent of the T1 code, which is being received at the distant T1 input port. Thus, if the line codes being received by HiGain are different in each of the two T1 directions, the HiGain T1 output codes will not match their respective T1 input codes at the other end. This could cause the customer's received data to be AMI instead of B8ZS, and thus violate the one's density rules by having excessive zeroes.

5.06 The following three user options can only be set via the RS-232 terminal interface: Circuit ID, DS0 Blocking, and Margin Alarm Threshold.

5.07 The Circuit ID option is set by choosing the **H** option from the terminal Main Menu screen (see Figure 7 for non-doubler applications and Figure 16 for doubler applications). The message "ENTER CIRCUIT ID#:" (24 characters max) follows the "H" selection. Press **Enter** after entering the chosen set of alpha-numeric ID characters; choose **C** to confirm. Note that if more than 24 characters are entered, a "Beep" is emitted, and only the first 24 characters are accepted. The ID appears in all HLU-388, List 2D screens, as shown in Figures 7 through 14 for non-doubler applications and Figures 16 through 34 for doubler applications. The ID does not appear on the HRU-412 screens when the maintenance port is accessed at the remote unit. Note that the Circuit ID can not be set to its factory setting (all blanks) setting when the DFLT setting option is utilized (see paragraph 5.03 on the previous page).

5.08 To set the DS0 Blocking option, from the Main Menu screen, press **C** to select the System Settings Menu screen. The menu shown in Figure 10 (for non-doubler applications) and Figure 22 (for doubler applications) appears. Press **B**, as shown in parentheses of the DS0 blocking selection. The DS0 channels are blocked or unblocked by entering each channel number. Multiple channels can be selected by inserting a space between each entry. After all the new settings have been made, press **E** ("Exit") and **C** ("Confirm"). The new choices are now installed. Also, all blocked channels are temporarily "unblocked" for all HiGain system loopback tests. This allows the standard full bandwidth T1 loopback tests to be performed.

5.09 To set the Margin Alarm Threshold, select **G** from the System Settings Menu screen. Enter the desired minimum acceptable alarm threshold from the 0 to 15 dB range. This causes a minor alarm to occur if either the margin on HDSL loop 1 (MAL1) or loop 2 (MAL2) of any span drops ***below*** the selected threshold value (see Section 4). Since the margin can never drop below 0, choosing **0** for the margin threshold turns the margin alarm off.

5.10 Other system settings are set by using a terminal in a similar manner. Enter the key represented by the letter in parentheses of the parameter to be changed. Each entry of this letter scrolls the parameter to its next value. Hit the **Enter** key after making each selection. After all selections have been made, press **E** to "Exit" and **C** to "Confirm" the changes. This activates the new choices and returns control to the Main Menu screen.

5.11 The new T1 transceiver chip in the List 2D allows the unit to process both B8ZS and AMI code inputs, regardless of the DS1 code setting (AMI or B8ZS). Earlier units caused input BPV, if B8ZS patterns were processed while in the AMI mode. When the newer units are in the AMI mode, they can receive B8ZS but can only transmit AMI. For this reason, mixed systems (those consisting of both HLU-388, List 2D and older Lists 1, 2, 3, 3A and 4 HRU-412 units) will respond differently in each direction for B8ZS inputs when in their AMI modes.

5.12 The Self-test mode, which occurs when both HDSL loops are not in-sync, has been enhanced to include the input DS1 transceiver chip in the self-test procedure. This process can cause the Alarm Indicating Signal (AIS) pattern, which is normally transmitted from the HLU-388, List 2D during these out-of-sync intervals, to exhibit occasional BPVs.

5.13 The HAIS option provides two selections (1LP and 2LP) for the T1 transmit outputs at both the HLU-388, List 2D and HRU-412 for HDSL loss-of-sync conditions. The "1LP" selection causes the AIS pattern to be transmitted at both T1 outputs when either of the two HDSL loops experience a loss-of-sync (LOSW) condition or when a margin alarm occurs. This choice causes the 12 channels on the surviving loop to be lost as they are replaced by the AIS pattern. However, it allows both down and upstream equipment to be made aware of the loss of one HDSL loop or a loop with low margin. The 1LP selection is the preferred setting to be able to initiate an AIS state with just one conductor open in either of the HDSL pairs. Short loops, below about 16 dB of loss at 200 kHz, can remain in-sync with one conductor open. Since the loop is still in-sync, no LOSW condition occurs. However, the margin on a one-conductor loop drops from 5 to 10 dB. Thus, if the margin alarm is set to 5 dB below the normal margin at turn-up, when one conductor opens, a minor alarm occurs and causes the AIS condition. This alerts the maintenance personnel of the problem. The "2LP" choice requires both HDSL loops to be out-of-sync (LOSW) before the AIS signal is transmitted. This choice preserves the integrity of the 12 surviving channels when just one loop is lost.

5.14 All user options that affect the operation in both the HLU-388, List 2D and HRU-412, (such as HAIS, SAIS and DS0 blocking) are not available in older versions of the HRU-412, Lists 1, 2, 3, 3A, and 4 that do not support these newer options.

TABLE 1. HLU-388, LIST 2D SYSTEM OPTIONS

Mode	*Selection*	*Description*
EQL	0*	Sets the equalizer to DSX-1 for 0 to 132 feet.
	133	Sets the equalizer to DSX-1 for 133 to 265 feet.
	266	Sets the equalizer to DSX-1 for 266 to 398 feet.
	399	Sets the equalizer to DSX-1 for 399 to 532 feet.
	533	Sets the equalizer to DSX-1 for 533 to 655 feet.
LPBK	DIS	Configures the HiGain system to ignore the (2 in 5) in-band Smart-Jack loopback command.
	ENA*	Enables the HiGain system to recognize the (2 in 5) in-band Smart-Jack loopback command.
SPLB	GNLB*	Configures the HiGain system to respond to the generic (3/4/5/6 in 7) in-band loopback codes.
	A1LB and A2LB	Configures the HiGain system to respond to the Teltrend addressable repeater in-band loopback codes.
	A3LB	Configures the HiGain system to respond to the Wescom addressable repeater in-band loopback codes.
	A4LB	Configures the HiGain system to respond to the Wescom Mod 1 addressable repeater in-band loopback codes.
	A5LB	Configures the HiGain system to respond to the Teltrend Mod 1 addressable repeater in-band loopback codes.
PWRF	DIS	Disables powering to the HRU-412 and doubler.
	ENA*	Enables powering to the HRU-412 and doubler.
ZBTS	ON	Tells the HiGain system that the ESF frame is operating in its Zero Byte Time Slot Interface (ZBTSI) mode.
	OFF*	Tells the HiGain system that the ESF frame is operating in its normal non-ZBTSI mode.
ESAL	17	Flashes the red Status LED when 17 Errored Seconds (ES) (17 HDSL cyclic redundancy check (CRC) errors on either HDSL loop or a total of 17 BPVs) occur within a 24-hour period.
	170	Flashes the red Status LED when 170 ES (170 HDSL CRC errors on either HDSL loop or a total of 170 BPVs) occur within a 24-hour period.
	NONE*	Prevents generation of a minor alarm due to excessive errored seconds.
LBTO	NONE	Disables automatic time-out cancellation of all loopbacks.
	20	Sets automatic cancellation of all loopbacks to 20 minutes after initiation.
	60*	Sets automatic cancellation of all loopbacks to 60 minutes after initiation.
	120	Sets automatic cancellation of all loopbacks to 120 minutes after initiation.
ALM	DIS*	This generic HiGain ALM option is not supported by the HLU-388, List 2D. Its setting has no effect on the units operation.
	ENA	

Note: An asterisk (*) indicates HLU-388, List 2D factory (default) settings.

Table continued on next page

TABLE 1. HLU-388, LIST 2D SYSTEM OPTIONS (CONTINUED)

Mode	*Selection*	*Description*
DS1	AUTO	The HLU-388, List 2D and HRU-412 independently monitor their incoming T1 bit streams for the Binary Eight Zero Substitution (B8ZS) pattern. If either unit detects this pattern, it enters its B8ZS mode. It reverts back to its Alternate Mark Inversion (AMI) mode if no B8ZS patterns are received for five seconds.
	B8ZS	Places both the HLU-388, List 2D and HRU-412 into their B8ZS modes.
	AMI*	Places both the HLU-388, List 2D and HRU-412 into their AMI modes.
FRMG	AUTO*	Configures the HiGain system to operate in an auto-framing (Auto) mode in which it continuously searches the input T1 bit stream for a valid SF or ESF frame pattern. This feature is required for fractional T1 applications (DS0 blocking) where it insures proper channel time slot alignment. While the HiGain system can also process unframed data in this Auto mode, it is recommended that the unframed (UNFR) mode be used for all unframed applications. Using the Auto mode for unframed applications runs the risk of detecting "pseudo-valid" frame sequences, which can affect the data integrity.
	UNFR	Configures the HiGain system to operate in an unframed mode. This mode disables the auto framing process and forces the HiGain system to function as a transparent bit pipe.
HAIS	2LP*	Causes the HiGain system to transmit the AIS signal at both the HLU-388, List 2D and HRU-412 T1 output ports when both of the HDSL loops are not in-sync (LOSW).
	1LP	Causes the HiGain system to transmit the AIS signal at both the HLU-388, List 2D and HRU-412 T1 output ports when either of the two HDSL loops is not in-sync (LOSW) or if a MARGin alarm occurs.
SAIS	ENA*	Causes the Lists 6 and 7, HRU-412 to transmit the AIS signal toward the Customer Interface (CI) when in NREM or Smart-Jack loopback (see Figure 6).
	DIS	Causes the List 6, HRU-412 to transmit the signal from the network toward the CI when an HRU NREM or Smart-Jack loopback is executed. The AIS signal is off.
CONF	YES	Confirms that all twelve operating modes (listed above) are to be updated to their current selections.
	NO*	Prevents the most recently selected operating mode selections from being updated. They remain as they were before the system options settings mode was entered.
MARG	0 to 15 dB	The Margin Alarm Threshold can only be set, via the RS-232 maintenance port, with a terminal (see Figures 10 and 22 for non-doubler and doubler screens, respectively). It determines the minimum allowable margin below which a minor alarm can occur. Note that setting the threshold to "0" inhibits the margin alarm.
	4 dB*	(Default value)
DS0	BLK	The DS0 blocking option can only be set via the RS-232 maintenance port with a terminal (see Figures 10 and 22 for non-doubler and doubler screens, respectively). The 4-character HLU-388, List 2D front panel LED readout only displays the status of the blocking option. BLK indicates at least one channel is blocked.
	NONE*	"None" indicates no channels are blocked.

6. HDSL LINE VOLTAGE OPTION

6.01 The symmetry of the HDSL line powering voltage can be set by the S2 switch, located on the printed circuit board, as shown in Figure 5.

6.02 The factory default setting is unipolar (-). It sets the HDSL line voltage to 0 V on loop 2 and to either -130 V (for non-doubler applications) or -200 V (for doubler applications) on loop 1. This setting keeps the HDSL cable pair voltage at or below ground potential, thereby avoiding corrosion problems caused by cable voltages more positive than ground.

6.03 The bipolar selection sets the HDSL line voltage to +65 V on loop 2 and -65 V on loop 1, for non-doubler applications. Doubler applications will have +100 V on loop 2 and -100 V on loop 1. This setting reduces the maximum ground referenced voltage to 100 V, but applies positive voltage to the cable pairs, which could accelerate corrosion on the cable pairs.

6.04 The line voltage power supply, used for both options, is ground referenced, but also ground isolated by 200 kohms. This ground isolation reduces problems due to induced noise currents and large surge voltages, which are ground referenced. It also reduces ground fault currents, which improves the product's safety. The safety issue thus depends solely on the differential voltage across loop 1 and loop 2, and is independent of S2's setting.

7. INSTALLATION

7.01 Upon receipt of the equipment, visually inspect it for signs of damage. If the equipment has been damaged in transit, immediately report the extent of damage to the transportation company and to PairGain Technologies.

7.02 The HLU-388 mounts in the group of both wire-wrapped and connectorized shelves listed in Section A Paragraph 1.02. The HLU-388 slot pins are shown in Figure 4.

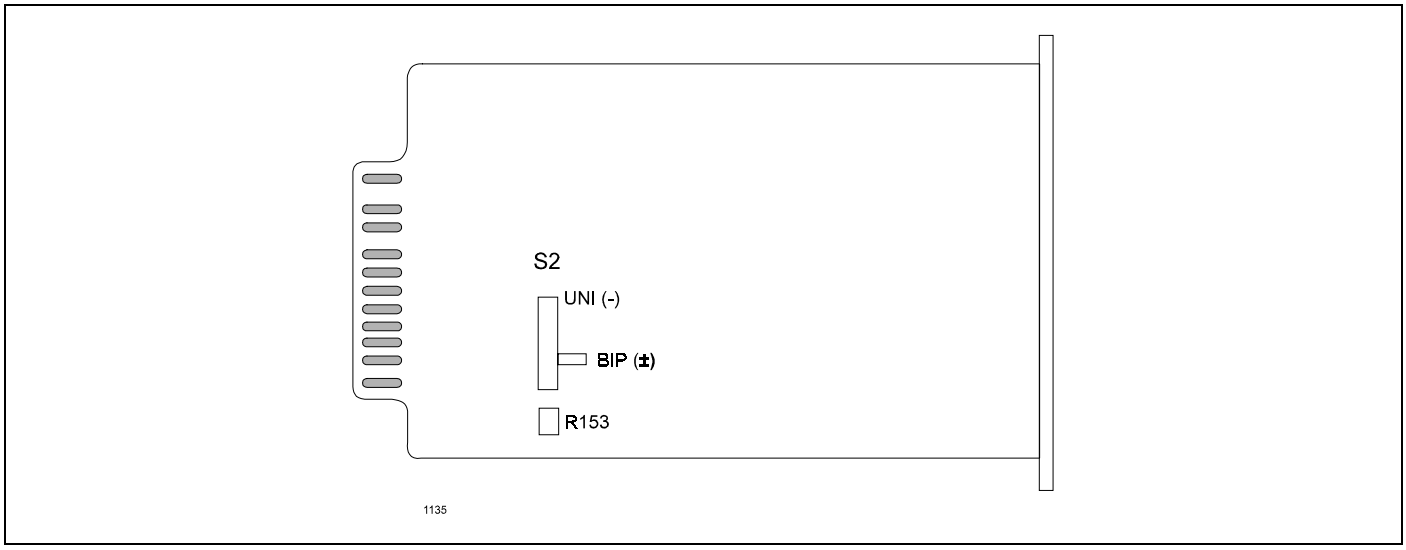

Figure 5. HDSL Line Voltage Switch S2

8. SPECIFICATIONS

HDSL Line Code
784 kbps 2B1Q

HDSL Output
+13.5 dBm ± 0.5 dB at 135 ohms

HDSL Line Impedance
135 ohms

Maximum Provisioning Loss
35 dB at 196 kHz, 135 ohms

Line Clock Rate
Internal Stratum 4 clock

HDSL Start-up Time
30 seconds (typical), 60 seconds (maximum) per span

One-way DS1 Delay
<220 microseconds per span

DSX-1 Line Impedance
100 ohms

DSX-1 Pulse Output
Pre-equalized for 0 to 655 feet
of ABAM-specification cable

DSX-1 Input Level
+1.5 to -7.5 dBDSX

DSX-1 Line Rate
1.544 Mbps ± 200 bps

DSX-1 Line Format
AMI, B8ZS or ZBTSI

DSX-1 Frame Format
ESF, SF or UNFR

Maximum Power Consumption
14 Watts (without doubler); 25 Watts (with doubler)

Maximum Heat Dissipation
6 Watts (without doubler); 9 Watts (with doubler)

Fusing
Internal; connected to Fuse Alarm output on pin 10

HDSL Span Voltage (Differential)
130 or 200 Vdc

Margin Indicator
Displays HDSL loop SNR margin for each HDSL loop relative to 10^{-7} BER operation

Electrical Protection
Secondary surge protection on DS1 and HDSL ports;
Power cross protection on HDSL ports

Operating Temperature and Humidity
-40° to +65° Celsius, 5 to 95% (non-condensing)

Mounting
Type DDM^{+}, high density shelf or equivalent

Dimensions

Height:	3.5 in.	(8.9 cm)
Width:	0.72 in.	(1.8 cm)
Depth:	10.25 in.	(26 cm)

Weight: TBD

9. CERTIFICATION

9.01 FCC compliance: The HLU-388, List 2D was tested and found to comply with the limits for Class A digital devices, pursuant to Part 15 of the FCC rules. These limits are designed to provide reasonable protection against harmful interference when the equipment is operated upon in a commercial environment. This equipment generates, uses and can radiate radio frequency energy. If it is not installed and used in accordance with the instruction manual, harmful interference to radio communications may result. Operation of this equipment in a residential area is likely to cause harmful interference, in which case, the user will be required to correct the interference at his own expense.

10. WARRANTY

10.01 PairGain Technologies warrants this product to be free of defects and fully functional for a period of 36 months from the date of original shipment, given proper installation. During the warranty period, PairGain will repair or replace any unit, without cost, if the unit is found to be defective for any reason other than abuse, improper use or installation.

10.02 This module should not be field repaired. If it fails, replace it with another unit and return the faulty unit to PairGain for repair. Any modifications of the unit by anyone other than an authorized PairGain representative voids the warranty.

10.03 If a unit needs repair, call PairGain for a Return Material Authorization (RMA) number and return the defective unit, freight prepaid, along with a brief description of the problem, to:

PairGain Technologies, Inc.
14402 Franklin Avenue
Tustin, CA 92780
ATTN: Repair and Return Dept.

(714) 832-9922
(800) 638-0031

11. TECHNICAL ASSISTANCE

11.01 PairGain Technical Assistance is available 24 hours a day, 7 days a week by contacting PairGain's Customer Service Engineering group at one of the following numbers:

Telephone:	**(800) 638-0031**
	(714) 832-9922
Fax:	**(714) 832-9924**

During normal business hours (8:00 AM to 5:00 PM, Pacific Time, Monday through Friday, excluding holidays), technical assistance calls are answered directly by a Customer Service Engineer. At other times, a request for technical assistance is handled by an on-duty Customer Service Engineer through a callback process. This process results in a callback within 30 minutes of initiating the request. In addition, PairGain maintains a computer bulletin board system for obtaining current information on PairGain products, product troubleshooting tips and aids, accessing helpful utilities, and posting requests or questions. This system is available 24 hours a day by calling (714) 730-3299. Transmission speeds up to 28.8 kbps are supported with a character format of 8-N-1.

B. APPLICATIONS WITHOUT HIGAIN DOUBLERS (HDU-451)

12. SECTION INTRODUCTION

12.01 This section addresses HLU-388, List 2D operation without the use of doublers. For applications without doublers, the HLU-388 is directly connected to the HRU-412 by the two cable pairs.

13. POWER CONSUMPTION

13.01 The three most important power demands of an HLU-388, List 2D on the shelf power supply are its maximum power consumption, its maximum power dissipation, and its maximum current drain. These three parameters for the HLU-388, List 2D, on a per-slot and per-shelf basis, are as follows:

Maximum Power Dissipation:

- Per Slot = 6 Watts
- Per Shelf = 168 Watts

Maximum Power Consumption:

- Per Slot = 15 Watts
- Per Shelf = 420 Watts

Maximum Current Drain:

- Per Slot = 0.28 Amps
- Per Shelf = 7.9 Amps

Note: The worst case conditions, under which these parameters were measured, include a 9,000 ft., AWG 26 loop, 60 mA of Customer Provided Equipment (CPE) current, a fully loaded 28-slot shelf, and a -42.5 V shelf battery voltage with the HLU-388 4-character display "OFF." For the purpose of comparison, the HLU-388, List 1 unit dissipates 8.5 Watts and consumes 18 Watts per slot under similar worst case conditions.

13.02 The Maximum Power Dissipation measures the power that is converted into heat buildup within the unit. It contributes to the total heat generated in the space around the unit. It is used to determine the maximum number of fully loaded shelves per bay that does not exceed the maximum allowable power dissipation density in Watts/sq. ft.

13.03 In Central Office locations, the maximum power dissipation for open-faced, natural convection cooled mountings is limited to 120 Watts/sq. ft. per Section 4.2.3 of the NEBS standard TR-NWT-000063. The footprint of a standard 28-slot 23-inch HLU-388, List 2D shelf is 7.024 sq. ft. Thus, the maximum bay dissipation is limited to 840 Watts. At 6 Watts per slot, this limits the number of occupied slots to 140 per bay.

13.04 The thermal loading limitations, imposed when using the HLU-388, List 2D in a Controlled Environmental Vault (CEV) or other enclosures, are determined by applying the HLU-388, List 2D's power parameters to the manufacturer's requirements for each specific housing.

13.05 The Maximum Power Consumption is the total power that the HLU-388, List 2D consumes or draws from its -48 V shelf power source. This parameter is needed when the HLU-388 is remotely located to its serving CO. It determines the battery capacity required to maintain an 8-hour standby battery reserve for emergency situations; thus limiting the maximum number of plugs per line unit's remote enclosure. Use the above data to perform this analysis on a case-by-case basis.

13.06 The Maximum Current Drain is the maximum current drawn from the shelf power supply when it is at its minimum voltage (-42.5 V). It determines the shelf fusing requirements. All HLU-388 shelves are partitioned into two equal halves, each fused at 10 amps for a total of 20 amps per shelf. A fully loaded shelf draws 7.9 amps worst case. This is within the 20 amp fuse limit.

13.07 Heat baffles should be placed between every other shelf, in racks containing more than two shelves. This technique deflects the rack's heat outward and reduces the thermal stress on the plugs.

14. LOOPBACK OPERATION

14.01 The HiGain system has a family of loopback options. The most important of these is the "Smart-Jack" loopback which enables the HRU-412 to respond to the standard (2/3 in 5) Smart-Jack in-band loopback codes, and thus emulates the functions of a standard Network Interface Device (NID). This option can be ENAbled or DISabled from either the front panel buttons or the terminal System Settings Menu.

14.02 In addition to the Smart-Jack loopback, the HiGain system can be configured for one of five special in-band loopback (SPLB) command sequences. These are selected from the SPLB user options, which are shown in Table 1 and Figure 11 (non-doubler applications). The non-doubler loopback locations are shown in Figure 6.

14.03 "GNLB" is the HiGain system Generic Loopback code. The GNLB allows in-band codes to loop up either the HLU/NLOC (4 in 7) or the HRU/NREM (3 in 7) toward the network. In addition, it allows in-band codes to loop up the HLU/CREM (6 in 7) or the HRU/CLOC (5 in 7) toward the customer. Either loop-up condition is terminated (looped down) with the (3 in 5) loop-down code. Both in-band codes must be present for 5 seconds before the HiGain system responds. Table 2 lists the test procedures that apply when using the GNLB mode.

14.04 The A1LB loopback selection complies with that proposed for HDSL systems in the T1E1.4/92 recommendation with the following additions (see Table 3):

- Query loopback
- Intelligent Office Repeater (IOR) power-down
- Three loopback time-out choices
- Initiation from either end
- Repeating bit error signatures
- Alternate query loopback

These additions make A1LB identical to A2LB, but they retain separate identities to allow future T1/E1 enhancements to A1LB without affecting A2LB.

14.05 A2LB through A5LB are four special addressable repeater loopback functions, which are supported by the List 2D version of the HiGain system. These loopbacks provide the HiGain system with sophisticated maintenance and troubleshooting tools. Table 4 through Table 7 list the details of these SPLB functions. A2LB and A5LB are patterned after the Teltrend addressable T1 repeater loopbacks. A3LB and A4LB are patterned after the Wescom addressable T1 repeater loopbacks. All four SPLBs have been enhanced to handle the specific requirements of the following HiGain system customers:

- A2LB (Teltrend) = Southwestern Bell
- A3LB (Wescom) = New England Telephone
- A4LB (Wescom Mod 1) = New York Telephone
- A5LB (Teltrend Mod 1) = Southern New England Telephone (SNET)

14.06 A5LB differs from A2LB in that A5LB does not block the arming (3 in 5) code from exiting the HLU-388, List 2D into the network. A2LB can be configured to either block this arming code after two seconds and replace it with the AIS code or unblock it by executing the Far-End Activate code. Since A5LB never blocks the arming code from exiting the HLU-388, List 2D, it does not need this Far-End Activate code. A3LB differs from A4LB in that A3LB supports the additional (1 in 6) Smart-Jack loopback command. Refer to the PairGain HiGain-2 Intelligent Repeater Application Note #910 Part #325-910-100 for more SPLB details.

14.07 When T1 loopback tests are performed on the HiGain system with metallic loopback connections at either end, the T1 code, which exists at the metallic loopback interface, may be different from the T1 code being received at the opposite end when the DS1 user code is set to Auto. This is caused by the fact that, in the Auto DS1 code mode, the HLU-388, List 2D and HRU-412 set their own codes independently of each other. Each end sets its transmit code to match its receive code. Thus, if one end is receiving AMI, and the other B8ZS, their codes are different. For example, if the HRU-412 has a metallic loopback, and the HLU-388, List 2D receive pattern code is changed from AMI to B8ZS, and next, the all "0" pattern is sent into the HLU-388, List 2D, then the HLU-388, List 2D changes to its B8ZS mode while the HRU-412 remains in its AMI mode, and thus loops all "0." This causes the HRU-412 to indicate an LOS condition, which causes the HLU-388, List 2D to output the AIS pattern.

14.08 Pressing both the **Mode** and **SEL** front panel push buttons, for at least three seconds, initiates a Manual Loopback session. This session allows the user to select one of four HiGain system loopbacks. The message, "MAN LPBK," appears on the front panel display followed by the message "NLO?" If the **SEL** button is pressed at this time, an NLOC loopback is executed changing the message from "NLO?" to "NLOC." If the **Mode** button is pressed instead of the **SEL** button, "NLO?" is replaced by "NRE?" This now allows an NREM loopback to be executed with the **SEL** button. Pressing the **Mode** button two more times yields the "CRE?" (CREM) and "CLO?" (CLOC) customer loopback options in the sequence listed. This interactive button procedure permits any of the four HiGain loopbacks to be executed. The next loopback option can be presented by pressing the **Mode** push button, however, the previously executed loopback will remain active until the **SEL** push button is pressed, and a different loopback is activated. If, after 30 seconds, neither button is pressed, this manual loopback session terminates, and the normal margin displays reappear. If this time-out occurs with an active loopback in effect, the appropriate loopback and loop margin messages appear. Once the manual loopback session terminates, the loopback remains in effect until it times out in accordance with the user LBTO setting. It can also be terminated by re-entering the manual loopback mode and selecting another loopback. Only one loopback can exist at any given time. Pressing both the **Mode** and **SEL** buttons again for three seconds, terminates any active loopback, ends the Manual Loopback session, and returns the display to normal. Note that these same loopbacks can be initiated from the RS-232 maintenance port by choosing the Loopback Mode, option **D**, from the Main Menu. This displays the Loopback Menu (see Figure 11), from which any of the loopbacks can be initiated/ terminated.

15. TESTING

15.01 Table 2 through Table 7 provide step-by-step test procedures for the HLU-388, List 2D as a function of the loopback option selected. These procedures allow verification of the integrity of the HDSL channels at every module location as well as the DS1 channels to the customer and the local DSX-1 interface.

15.02 The HLU-388, List 2D 4-character front panel display has many useful system diagnostic messages. They are listed in Table 10. This display turns on when power is initially applied to the HLU-388, List 2D. To conserve power, the display remains on for only five minutes when neither the **Mode** or **SEL** buttons are pressed. The use of either button activates the 4-character display and restarts the 5-minute power control timer.

15.03 If trouble is encountered on the HLU-388 List 2D DSX-1 interface, verify that the HLU-388, List 2D is making a positive connection with its mounting assembly (shelf) connector. Also, verify that the HLU-388, List 2D equalizer is set to the correct distance range per Table 1. All installations should be set to the largest distance range value that does not exceed the distance from the DSX-1 to the shelf.

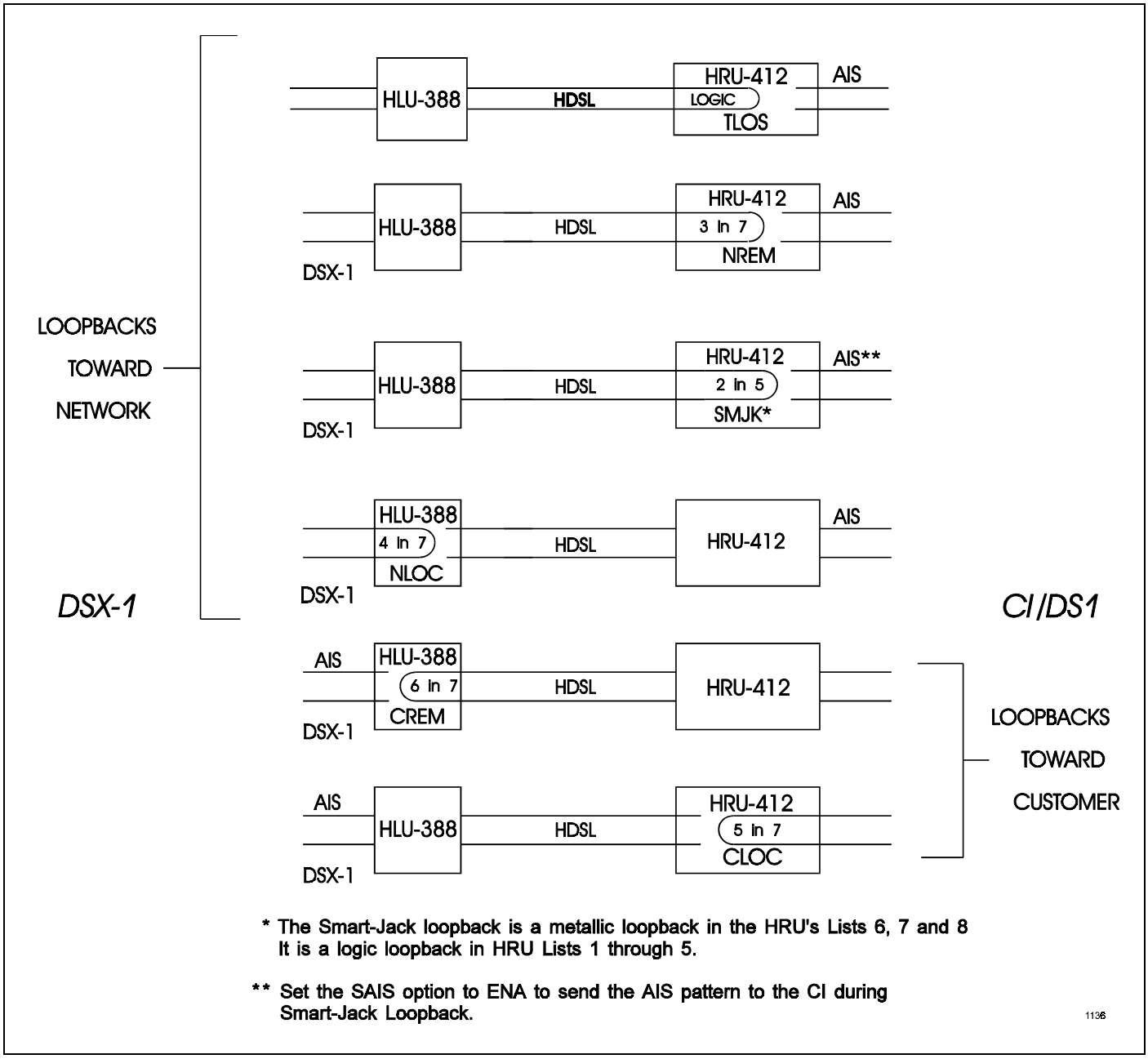

Figure 6. HLU-388, List 2D Non-Doubler Loopback Configurations. The most important of the HiGain family of loopback options is the Smart-Jack loopback, which emulates the functions of a standard NID.

TABLE 2. HLU-388 GNLB TEST PROCEDURES

Step	*Action*
1	Have the CO tester send the HRU-412 (3 in 7) in-band loop-up code for five seconds. Observe that the HLU-388, List 2D displays the "NREM" message indicating an HRU loopback is in effect (see Figure 6).
2	Have the CO tester transmit a DSX-1 test signal into the HLU-388, List 2D and verify that the returned (looped) signal is error free.
3	If the above test fails, have the CO tester transmit the (3 in 5) in-band loop-down code. Verify that the HLU-388, List 2D display returns to normal.
4	Have the CO tester send the HLU-388, List 2D (4 in 7) in-band loop-up code for five seconds. Observe that the HLU-388, List 2D displays the "NLOC" message, which indicates that an HLU-388, List 2D loopback is in effect.
5	Repeat Step 2. If the test passes, the problem is in the cable pair or the HRU-412. If it fails, the problem is in the CO equipment.
6	The NREM and NLOC loopbacks can also be initiated from the front panel of the HLU-388, List 2D with the Mode and SEL push buttons (see Section B Paragraph 14.09).
7	The HLU-388, List 2D can be looped up from the remote location (CREM) by issuing the (6 in 7) command at the HRU-412 DS1 input port.
8	The HRU-412 can be looped up from the remote location (CLOC) by issuing the (5 in 7) command at the HRU-412 DS1 input port.

TABLE 3. HLU-388 A1LB TEST PROCEDURES

Step	*Action*
1	Send the in-band Arming and NI LPBK code 11000 into the HLU-388, List 2D, for at least five seconds or at least four repetitions of the 16-bit ESF data link Arming code 1111 1111 0100 1000 (FF48). (Left bit arrives first.)
2	Monitor the output of the HLU-388, List 2D for the return of the pattern. Return of pattern indicates that either the HRU-412 has looped up (if the Smart-Jack Loopback option is ENAbled) or an external NI has looped up (if the Smart-Jack Loopback option is DISabled), and that the HLU-388, List 2D and HRU-412 units have been Armed. Verify that the HLU-388, List 2D display intermittently indicates "Arm" and also "SMJK," if the HRU-412 is in loopback. Also verify, if possible, that the Loopback LED of the HRU-412 is flashing (indicating that the HRU-412 is armed), or, that the Loopback LED lights steadily (indicating that the HRU-412 is both armed and in loopback).
3	Once armed the HLU-388, List 2D can be looped back (NLOC in Figure 6) by sending the Intelligent Office Repeater Loopback (IOR LPBK) activation code 1101 0011 1101 0011 (D3D3) for at least five seconds. The tester observes the following activation response: • Two seconds of AIS (all ones), followed by: • Five seconds of returning data pattern, followed by: • 231 logic errors (including the frame bit) occur in the returned pattern (20 errors if ILR-2 was sent), followed by: • Normal looped data. ***Note:*** This error pattern will repeat every 20 seconds, as long as the IOR loopback pattern is being sent. This same 20-second repeat scenario also applies to the Time-out Override and Query commands. It also applies (with the appropriate number of bit errors) to the other ILR commands. The HiGain Line Unit is now in Logic Loopback (NLOC of Figure 6). The display on the HLU-388, List 2D periodically shows "NLOC" (network local loop) and "Arm" (the HLU-388, List 2D is still armed) in addition to the margin displays. The Loopback Time-out option (which is user settable to "None," 20, 60, or 120 minutes) determines the duration of this loopback, unless it is overridden by the Time-out Override command or a loop-down command is sent. If the Time-out Override code 1101 0101 1101 0110 (D5D6) is received, the "activation sequence," described in "3" above, is repeated, and the automatic timed expiration of the loopback is inhibited. If this Time-out Override is sent, then the only way to loop the HLU-388, List 2D down is to issue the Intelligent Repeater Loop-down (IR LPDN) code 1001 0011 1001 0011 (9393) or to issue the NI LPDN and Disarm code 11100. The automatic time-out timer is restored during subsequent loopback sessions.
4	Upon completion, the tester sends the IOR LPDN code 1001 0011 1001 0011 (9393) to loop down the HLU-388, List 2D. The unit remains armed, however, as indicated by the "Arm" message on the HLU-388, List 2D and the flashing of the HRU-412 Loopback LED.

Table continued on next page

TABLE 3. TEST PROCEDURES FOR A1LB OPTION (CONTINUED)

Step	Action
5	Using the following codes, a network tester can activate loopbacks NLOC or NREM or SMJK (if ENAbled, see Figure 6). A customer tester can activate loopbacks CLOC or CREM.

ADDRESSABLE 1 (A1LB) REPEATER LOOPBACK COMMANDS

ARMING or NI LPBK (in-band)	Arming code	11000 11000 ...
ARMING or NI LPBK (ESF data link)	Arming code	1111 1111 0100 1000 (FF48)*
IR LPDN or DISARM (in-band)	Disarming code	11100 11100 ...
DISARM (ESF data link)	Disarming code	1111 1111 0010 0100 (FF24)
IOR LPBK (NLOC and CREM 231 errors)	HLU Loop-up	1101 0011 1101 0011 (D3D3)
ILR-2 LPBK (NREM and CLOC 20-bit errors)	HRU Loop-up	1100 0111 0100 0010 (C742)
IR LPDN	Loop-down (HLU or HRU)	1001 0011 1001 0011 (9393)
IR QUERY LPBK	Query Loopback	1101 0101 1101 0101 (D5D5)
IR ALTERNATE QUERY LPBK	Alternate Query Loopback	1101 0101 1110 1010 (D5EA)
TIME-OUT OVERRIDE	Loopback Time-out Override	1101 0101 1101 0110 (D5D6)
FAR END NI ACTIVATE	Unblock AIS and pass 2 in 5	1100 0101 0101 0100 (C554)
IOR POWER-DOWN (HLU)	Removes HDSL line power	0110 0111 0110 0111 (6767)

Note: The left-most bit arrives first in all sequences. The detection algorithm functions reliably with a random 10^{-3} Bit Error Ratio (BER) on the facility. The IOR Power-down code must remain present for the duration of the power-down mode. When this code is removed, the HiGain system returns to its normal unlooped and unarmed state.

6	After testing is complete, send the universal Intelligent Repeater Loop-down (IR LPDN) code if the system is to loop down but remain Armed. Send the disarm code 11100 if all the equipment is to be looped down, disarmed, and returned to normal operation. Note that the Armed mode has an automatic time-out of 120 minutes.
7	All of the above loopbacks can also be initiated from the front panel of the HLU-388, List 2D with the Mode and SEL push buttons (see Section B Paragraph 14.09). *This is the HEX number for the 16 bit group.

TABLE 4. HLU-388 A2LB TEST PROCEDURES

Step	*Action*
1	Send the in-band Arming and NI LPBK code 11000 into the HLU-388, List 2D, for at least five seconds or at least four repetitions of the 16-bit ESF data link Arming code 1111 1111 0100 1000 (FF48). (Left bit arrives first.)
2	Monitor the output of the HLU-388, List 2D for the return of the pattern. Return of pattern indicates that either the HRU-412 has looped up (if the Smart-Jack Loopback option is ENAbled) or an external NI has looped up (if the Smart-Jack Loopback option is DISabled), and the HLU-388, List 2D and HRU-412 units have been Armed. Verify that the HLU-388, List 2D display intermittently indicates "Arm" and also "SMJK," if the HRU-412 is in loopback. Also verify, if possible, that the Loopback LED of the HRU-412 is flashing (indicating that the HRU-412 is armed), or, that the Loopback LED lights steadily (indicating that the HRU-412 is both armed and in loopback).
3	Once armed, the HLU-388, List 2D can be looped back (NLOC in Figure 6) by sending the IOR LPBK activation code 1101 0011 1101 0011 (D3D3) for at least five seconds. The tester observes the following activation response: • Two seconds of AIS (all ones), followed by: • Five seconds of returning data pattern, followed by: • 231 logic errors (including the frame bit) occur in the returned pattern (20 errors if ILR-2 was sent), followed by: • Normal looped data. ***Note:*** This error pattern will repeat every 20 seconds, as long as the IOR loopback pattern is being sent. This same 20-second repeat scenario also applies to the Time-out Override and Query commands. It also applies (with the appropriate number of bit errors) to the other ILR commands. The HiGain Line Unit is now in Logic Loopback (NLOC of Figure 6). The display on the HLU-388, List 2D periodically shows "NLOC" (network local loop) and "Arm" (the HLU-388, List 2D is still armed) in addition to the margin displays. The Loopback Time-out option (which is user settable to "None," 20, 60, or 120 minutes) determines the duration of this loopback, unless it is overridden by the Time-out Override command or a loop-down command is sent. If the Time-out Override code 1101 0101 1101 0110 (D5D6) is received, the "activation sequence," described in "3" above, is repeated, and the automatic timed expiration of the loopback is inhibited. If this Time-out Override is sent, then the only way to loop the HLU-388, List 2D down is to issue the Intelligent Repeater Loop-down (IR LPDN) code 1001 0011 1001 0011 (9393) or to issue the NI LPDN and Disarm code 11100. The automatic time-out timer is restored during subsequent loopback sessions.
4	Upon completion, the tester sends the IOR LPDN code 1001 0011 1001 0011 (9393) to loop down the HLU-388, List 2D. The unit remains armed, however, as indicated by the "Arm" message on the HLU-388, List 2D and the flashing of the HRU-412 Loopback LED.

Table continued on next page

TABLE 4. HLU-388 A2LB TEST PROCEDURES (CONTINUED)

Step	Action
5	Using the following codes, a network tester can activate loopbacks NLOC or NREM or SMJK (if ENAbled, see Figure 6). A customer tester can activate loopbacks CLOC or CREM.

ADDRESSABLE 2 (A2LB) REPEATER LOOPBACK COMMANDS

ARMING or NI LPBK (in-band)	Arming code	11000 11000 ...
ARMING or NI LPBK (ESF data link)	Arming code	1111 1111 0100 1000 (FF48)*
IR LPDN or DISARM (in-band)	Disarming code	11100 11100 ...
DISARM (ESF data link)	Disarming code	1111 1111 0010 0100 (FF24)
IOR LPBK (NLOC and CREM 231 errors)	HLU Loop-up	1101 0011 1101 0011 (D3D3)
ILR-2 LPBK (NREM and CLOC 20-bit errors)	HRU Loop-up	1100 0111 0100 0010 (C742)
IR LPDN	Loop-down (HLU or HRU)	1001 0011 1001 0011 (9393)
IR QUERY LPBK	Query Loopback	1101 0101 1101 0101 (D5D5)
IR ALTERNATE QUERY LPBK	Alternate Query Loopback	1101 0101 1110 1010 (D5EA)
TIME-OUT OVERRIDE	Loopback Time-out Override	1101 0101 1101 0110 (D5D6)
FAR END NI ACTIVATE	Unblock AIS and pass 2 in 5	1100 0101 0101 0100 (C554)
IOR POWER-DOWN (HLU)	Removes HDSL line power	0110 0111 0110 0111 (6767)

Note: The left-most bit arrives first in all sequences. The detection algorithm functions reliably with a random 10^{-3} Bit Error Ratio (BER) on the facility. The IOR Power-down code must remain present for the duration of the power-down mode. When this code is removed, the HiGain system returns to its normal unlooped and unarmed state.

6	After testing is complete, send the universal Intelligent Repeater Loop-down (IR LPDN) code if the system is to loop down but remain Armed. Send the disarm code 11100 if all the equipment is to be looped down, disarmed, and returned to normal operation. Note that the Armed mode has an automatic time-out of 120 minutes.
7	All of the above loopbacks can also be initiated from the front panel of the HLU-388, List 2D with the Mode and SEL push buttons (see Section B Paragraph 14.09). *This is the HEX number for the 16 bit group.

TABLE 5. HLU-388 A3LB TEST PROCEDURES

<table>
<tr><th>Step</th><th>Action</th></tr>
<tr><td>1</td><td>The HiGain Line Unit can be looped back (NLOC in Figure 6) by sending the Addressable Office Repeater (AOR) LPBK activation code 1111 1111 0001 1110 (FF1E) for at least five seconds. This causes the HLU-388, List 2D to enter its NLOC state (see Figure 6). The display on the HLU-388, List 2D alternates between NLOC (network local loop) and the margin displays. The Loopback Time-out option (which is user settable to “None,” 20, 60, or 120 minutes) determines the duration of this loopback, unless it is overridden by the reception of a second identical 16-bit loop-up command before the timer expires. When this time-out override state exists, the only way to loop the HLU-388, List 2D down is to issue one of the three loop-down commands listed in Step 2. The automatic time-out mode is restored during subsequent loopback sessions.</td></tr>
<tr><td>2</td><td>The following list summarizes the codes required to execute all the HiGain loopbacks (see Figure 6). Note that all code sequences must be present for at least five seconds.

ABBREVIATIONS USED BELOW:
LU = Loop Up
LD = Loop Down
NI = Network Interface
CI = Customer Interface
ESF-DL = Extended Super Frame Data Link

ADDRESSABLE 3 (A3LB) REPEATER LOOPBACK COMMANDS
<table>
<tr><th>Position</th><th>Name</th><th>Code</th></tr>
<tr><td>HLU-388 LU from NI</td><td>NLOC</td><td>1111 1111 0001 1110 (FF1E)*</td></tr>
<tr><td>HLU-388 LU from CI</td><td>CREM</td><td>0011 1111 0001 1110 (3F1E)</td></tr>
<tr><td>HRU-412 LU from NI</td><td>NREM</td><td>1111 1111 0000 0010 (FF02)</td></tr>
<tr><td>HRU-412 LU from CI</td><td>CLOC</td><td>0011 1111 0000 0010 (3F02)</td></tr>
<tr><td>HRU-412 LU from NI</td><td>SMJK</td><td>11000 11000 11000 ...</td></tr>
<tr><td>HRU-412 LU from NI</td><td>SMJK</td><td>100000 100000 100000 ...</td></tr>
<tr><td>HRU-412 LU from NI (ESF-DL)</td><td>SMJK</td><td>1111 1111 0100 1000 (FF48)</td></tr>
<tr><td>HLU and HRU LD from NI or CI</td><td>Loop Down</td><td>11100 11100 11100 ...</td></tr>
<tr><td>HLU and HRU LD from NI or CI</td><td>Loop Down</td><td>100 100 100 ...</td></tr>
<tr><td>HLU and HRU LD from NI or CI (ESF-DL)</td><td>Loop Down</td><td>1111 1111 0010 0100 (FF24)</td></tr>
</table>
Note: The left-most bit arrives first in all sequences. The detection algorithm functions reliably with a random 10^{-3} Bit Error Ratio (BER) on the facility.</td></tr>
<tr><td>3</td><td>All of the above loopbacks can also be initiated from the front panel of the HLU-388, List 2D with the Mode and SEL push buttons (see Section B Paragraph 14.09). *This is the HEX number for the 16 bit group.</td></tr>
</table>

TABLE 6. HLU-388 A4LB TEST PROCEDURES

Step	Action
1	The HiGain Line Unit can be looped back (NLOC in Figure 6) by sending the Addressable Office Repeater (AOR) LPBK activation code 1111 1111 0001 1110 (FF1E) for at least five seconds. This causes the HLU-388, List 2D to enter its NLOC state (see Figure 6). The display on the HLU-388, List 2D alternates between NLOC (network local loop) and the margin displays. The Loopback Time-out option (which is user settable to "None," 20, 60, or 120 minutes) determines the duration of this loopback, unless it is overridden by the reception of a second identical 16-bit loop-up command before the timer expires. When this time-out override state exists, the only way to loop the HLU, List 2D down is to issue one of the three loop-down commands listed in Step 2. The automatic time-out mode is restored during subsequent loopback sessions.
2	The following list summarizes the codes required to execute all the HiGain system loopbacks (see Figure 6). Note that all code sequences must be present for at least five seconds. ***ABBREVIATIONS USED BELOW:*** *LU = Loop Up* *LD = Loop Down* *NI = Network Interface* *CI = Customer Interface* *ESF-DL = Extended Super Frame Data Link*

ADDRESSABLE 4 (A4LB) REPEATER LOOPBACK COMMANDS

Position	Name	Code
HLU-388 LU from NI	NLOC	1111 1111 0001 1110 (FF1E)*
HLU-388 LU from CI	CREM	0011 1111 0001 1110 (3F1E)
HRU-412 LU from NI	NREM	1111 1111 0000 0010 (FF02)
HRU-412 LU from CI	CLOC	0011 1111 0000 0010 (3F02)
HRU-412 LU from NI	SMJK	11000 11000 11000 ...
HRU-412 LU from NI (ESF-DL)	SMJK	1111 1111 0100 1000 (FF48)
HLU and HRU LD from NI or CI	Loop Down	11100 11100 11100 ...
HLU and HRU LD from NI or CI	Loop Down	100 100 100 ...
HLU and HRU LD from NI or CI (ESF-DL)	Loop Down	1111 1111 0010 0100 (FF24)

Note: The left-most bit arrives first in all sequences. The detection algorithm functions reliably with a random 10^{-3} Bit Error Ratio (BER) on the facility.

3	All of the above loopbacks can also be initiated from the front panel of the HLU-388, List 2D with the Mode and SEL push buttons (see Section B Paragraph 14.09). *This is the HEX number for the 16 bit group.

TABLE 7. HLU-388 A5LB TEST PROCEDURES

Step	*Action*
1	Send the in-band Arming and NI (Network Interface) LPBK code 11000 into the HLU-388, List 2D, for at least five seconds or at least four repetitions of the 16-bit ESF data link Arming code 1111 1111 0100 1000 (FF48). (Left bit arrives first.)
2	Monitor the output of the HLU-388, List 2D for the return of the pattern. Return of pattern indicates that either the HRU-412 has looped up (if the Smart-Jack Loopback option is ENAbled) or an external NI has looped up (if the Smart-Jack Loopback option is DISabled) and that the HLU-388, List 2D and HRU-412 units have been Armed. Verify that the HLU-388, List 2D display intermittently indicates "Arm" and also "SMJK," if the HRU-412 is in loopback. Also verify, if possible, that the Loopback LED of the HRU-412 is flashing (indicating that the HRU-412 is armed), or, that the Loopback LED lights steadily (indicating that the HRU-412 is both armed and in loopback).
3	Once armed, the HLU-388, List 2D can be looped back (NLOC in Figure 6) by sending the Intelligent Office Repeater Loopback (IOR LPBK) activation code 1101 0011 1101 0011 (D3D3) for at least five seconds. The tester observes the following activation response: • Two seconds of AIS (all ones), followed by: • Five seconds of returning data pattern, followed by: • 231 logic errors (including the frame bits) occur in the returned pattern (20 errors if ILR-2 was sent), followed by: • Normal looped data. ***Note:*** This error pattern will repeat every 20 seconds, as long as the IOR loopback pattern is being sent. This same 20-second repeat scenario also applies to the Time-out Override and Query commands. It also applies (with the appropriate number of bit errors) to the other ILR commands. The HiGain Line Unit is now in Logic Loopback (NLOC of Figure 6). The display on the HLU-388, List 2D periodically shows "NLOC" and "Arm" (the HLU-388, List 2D is still armed) in addition to the margin displays. The Loopback Time-out option (which is user settable to "None," 20, 60, or 120 minutes) determines the duration of this loopback, unless it is overridden by the Time-out Override command or a loop-down command is sent. If the Time-out Override code 1101 0101 1101 0110 (D5D6) is received, the "activation sequence," described in "3" above, is repeated, and the automatic timed expiration of the loopback is inhibited. If this Time-out Override is sent, then the only way to loop the HLU-388 down is to issue the Intelligent Repeater Loop-down (IR LPDN) code 1001 0011 1001 0011 (9393) or to issue the NI (Network Interface) LPDN and Disarm code 11100. The automatic time-out timer is restored during subsequent loopback sessions.
4	Upon completion, the tester sends the IOR LPDN code 1001 0011 1001 0011 (9393) to loop down the HLU-388, List 2D. The unit remains armed, however, as indicated by the "Arm" message on the HLU-388, List 2D and the flashing of the HRU-412 Loopback LED.

Table continued on next page

TABLE 7. HLU-388 A5LB TEST PROCEDURES (CONTINUED)

Step	Action
5	Using the following codes, a network tester can activate loopbacks NLOC or NREM or SMJK (if ENAbled, see Figure 6). A customer tester can activate loopbacks CLOC or CREM.

ADDRESSABLE 5 (A5LB) REPEATER LOOPBACKS

ARMING or NI LPBK (in-band)	Arming code	11000 11000 ...
ARMING or NI LPBK (ESF data link)	Arming code	1111 1111 0100 1000 (FF48)*
IR LPDN or DISARM (in-band)	Disarming code	11100 11100 ...
DISARM (ESF data link)	Disarming code	1111 1111 0010 0100 (FF24)
IOR LPBK (NLOC and CREM 231 errors)	HLU Loop-up	1101 0011 1101 0011 (D3D3)
ILR-2 LPBK (NREM and CLOC 20-bit errors)	HRU Loop-up	1100 0111 0100 0010 (C742)
IR LPDN	Loop-down (HLU or HRU)	1001 0011 1001 0011 (9393)
IR QUERY LPBK	Query Loopback	1101 0101 1101 0101 (D5D5)
IR ALTERNATE QUERY LPBK	Alternate Query Loopback	1101 0101 1110 1010 (D5EA)
TIME-OUT OVERRIDE	Loopback Time-out Override	1101 0101 1101 0110 (D5D6)
IOR POWER-DOWN (HLU)	Removes HDSL line power	0110 0111 0110 0111 (6767)

Note: The left-most bit arrives first in all sequences. The detection algorithm functions reliably with a random 10^{-3} Bit Error Ratio (BER) on the facility. The IOR Power-down code must remain present for the duration of the power-down mode. When this code is removed, the HiGain system returns to its normal unlooped and unarmed state.

6	After testing is complete, send the universal Intelligent Repeater Loop-down (IR LPDN) code if the system is to loop down but remain Armed. Send the disarm code 11100 if all the equipment is to be looped down, disarmed, and returned to normal operation. Note that the Armed mode has an automatic time-out of 120 minutes.
7	All of the above loopbacks can also be initiated from the front panel of the HLU with the Mode and SEL push buttons (see Section B Paragraph 14.09). *This is the HEX number for the 16 bit group.

TABLE 8. HLU-388, LIST 2D STATUS MENU MESSAGES

Message	*Full Name*	*Description*
ALARMS:		
NONE	No Alarms	"None" indicates no alarms.
LLOS	Local Loss of Signal	No signal from HLU-388, List 2D local DSX-1 interface.
RLOS	Remote Loss of Signal	No signal from HRU-412 remote DS1 interface.
LOSW1	Loss of Sync Word 1	HDSL loop 1 has lost sync.
LOSW2	Loss of Sync Word 2	HDSL loop 2 has lost sync.
H1ES	HDSL Loop 1 Errored Second	Loop 1 CRCs have exceeded the user-selected ES threshold.
H2ES	HDSL Loop 2 Errored Second	Loop 2 CRCs have exceeded the user-selected ES threshold.
DS1	Digital Service 1	T1 input BPVs, at either the HLU-388, List 2D or HRU-412, have exceeded the user-selected ES threshold.
RAIS	Remote Alarm Indicating Signal	Indicates an AIS (all "1") pattern is being transmitted from the remote T1 output port.
LAIS	Local Alarm Indicating Signal	Indicates an AIS (all "1") pattern is being transmitted from the local T1 output port.
MAL1	Margin Alarm 1	The margin on HDSL loop 1 has dropped below the threshold (0 to 15 dB) set by the user. Setting the threshold to 0 inhibits the margin alarm.
MAL2	Margin Alarm 2	The margin on HDSL loop 2 has dropped below the threshold (0 to 15 dB) set by the user. Setting the threshold to 0 inhibits the margin alarm.
CHREV	Channels Reversed	The loop 1 and 2 HDSL pairs are reversed at the HRU-412 line input port. Loop 1 is specified to carry the (-) simplex DC voltage, and loop 2 is specified to carry the (+) simplex DC voltage.
ACO	Alarm CutOff	A minor alarm occurred and was retired to an ACO condition after pressing the SEL button on the HLU front panel.

Table continued on next page

TABLE 8. HLU-388, LIST 2D STATUS MENU MESSAGES (CONTINUED)

Message	*Full Name*	*Description*
***LOOPBACKS*:**		
SMJK	Smart-Jack Loopback	The loopback at HRU-412 (remote) toward network (see Figure 6) initiated by either the (2 in 5) in-band loopback code or the out-of-band ESF data link loopback code.
NREM	Network Remote Loopback	The loopback at HRU-412 (remote) toward network (see Figure 6) initiated from CO (network) by either the Intelligent Line Repeater (ILR) number 2 code, the HLU-388 front panel Manual Loopback push buttons, the HRU-412 front panel push button, or the maintenance terminal.
NLOC	Network Local Loopback	The loopback at HLU-388, List 2D (local) toward network (see Figure 6) initiated from CO (network) by either the Intelligent Office Repeater (IOR) code, the HLU-388 front panel Manual Loopback push buttons, or the maintenance terminal.
CLOC	Customer Local Loopback	The loopback at HRU-412 (local) toward CI (see Figure 6) initiated from CPE (customer) by either the ILR number 2 code, the HLU-388 front panel Manual Loopback push buttons, or the maintenance terminal.
CREM	Customer Remote Loopback	The loopback at HLU-388, List 2D (remote) toward customer (see Figure 6) initiated from CPE (customer) by either the IOR code, the HLU-388 front panel Manual Loopback push buttons, or the maintenance terminal.
ARM	Armed	The HiGain system detected the IR loopback (2 in 5) arming code.
TLOS	Transmit Loss of Signal (Loopback)	HRU-412 is in a logic loopback state, caused by a loss of its DS1 input from the CI when ENAbled at the HRU-412, List 6 or List 7, via its TLOS switch option.

16. SYSTEM MAINTENANCE MENU SCREENS

16.01 Figure 7 is the Maintenance Terminal Main Menu screen. Its eight sub-menus provide many useful provisioning, test and monitoring tools. Figure 8 shows the HLU-388, List 2D Span Status screen.

16.02 Figure 9 shows the Set Clock Menu. The Time and Date are both set with this menu. Set the hours and minutes using the military (24-hour) convention. Setting the seconds is optional. Enter the date in the sequence and format shown. List 1 HRU-412 units, having software versions 6.4 and above, and all HRU-412 units with list numbers greater than 5, can be set to the same time and date as the HLU-388, List 2D by entering a **U** to the "Update Remote" query. All time information is lost when power is removed. The last date, however, is retained in NVRAM and reappears when power is restored.

16.03 Figure 10 shows the System Settings screen. All 14 user options can be set from this screen. To change any option, enter the character key which is shown inside the parentheses within each parameter description. This causes the screen to refresh with the new parameter. After all parameters have been selected, press **E** (Exit) then **C** (Confirm). The newly selected parameters are now activated.

16.04 Figure 11 shows the Loopback Menu screen for non-doubler applications. Loopbacks NLOC, NREM, CLOC and CREM are available.

16.05 Figure 12 shows the Performance Data screen for non-doubler applications. The "Errored Seconds" and "Unavailable Seconds" for both HDSL loops and each T1 input are listed at 15-minute intervals over a four-hour time period. Earlier and later data, in four-hour chunks on six different screens, can be accessed by pressing **P** (Previous) or **N** (Next) respectively. All of the counters can be set to zero by pressing **C** (Clear) from the HLU-388, List 2D Span Status screen shown in Figure 8. Note that since the HLU-388, List 2D is considered the master module, this clears *all* performance data screens at both the HLU-388, List 2D and the HRU-412. The RS-232 terminal interface at the HRU-412 does not allow the counters to be cleared.

16.06 Figure 13 shows the 7-Day Performance History screen. The "Errored Seconds" and "Unavailable Seconds" for both HDSL loops and each of the two DS1 inputs are listed for the current and previous seven days. All of the counters can be set to zero by pressing **C** (Clear) on the HLU-388, List 2D Span Status screen (see Figure 8). Note that since the HLU-388, List 2D is considered the master module, this clears *all* performance screens at both the HLU-388, List 2D and the HRU-412. The RS-232 terminal interface at the HRU-412 does not allow the counters to be cleared.

16.07 Figure 14 shows the Alarm History screen for non-doubler applications. The alarms are defined in Section A Paragraph 4.01. The "First" and "Last" columns contain the time and date stamp of the first and last occurrence of each alarm. The "Current" column shows the status of each alarm. The "Count" column lists the number of times each alarm occurred. All the data can be cleared by pressing **C** (Clear). The maximum non-overflowing count is 999.

16.08 Selection "H" from the Main Menu allows the Circuit ID number to be set. It is limited to 24 alpha- numeric characters. It, like the system settings, is stored in NVRAM and thus remains when power is lost. Note that the Circuit ID number is not available at the HRU-412 Maintenance Port.

TABLE 9. GLOSSARY OF HIGAIN TERMS

Term	*Definition*
Margins	Indicates the excess signal-to-noise ratio, at either the HRU-412 or HLU 388, List 2D HDSL ports, relative to a 10^{-7} Bit Error Rate. First value is current margin. Second value is minimum margin since (C)leared last. Third value is maximum value since cleared. NA means Not Available (loop is not in-sync). The normal range of a typical margin is from 22 to 6 dB.
Pulse Attenuation	Indicates the attenuation of the 2B1Q pulse from the distant end. The HiGain system operates with pulse attenuation in excess of 30 dB. This value is related to the cable pairs' 196 kHz loss. The pulse attenuation is a more direct indication of the loop attenuation to the 2B1Q signal than the 196 kHz loss. The normal range of pulse attenuation is from 1 to 32 dB.
PPM	Indicates the relative offset of the crystal oscillator in the HRU-412 from the HLU-388, List 2D crystal oscillator. Any value between -64 and +64 is adequate. Values outside this range indicate out-of-tolerance components or excessive temperature drift in critical components.
HDSL 24 Hours ES (Errored Seconds)	The number of 1-second intervals which contained at least 1 HDSL CRC error. This value is a running total of the last 24 hours.
HDSL 24 Hours UAS (Unavailable Seconds)	The number of seconds the HDSL loop was out-of-sync.
DS1 BPV Seconds (ES)	The number of seconds in which at least 1 bipolar violation was detected on the T1 input.
DS1 UAS Count	The number of seconds during which the T1 input signal was absent (125 or more consecutive "0").
Frame Type	Type of T1 framing used on the input stream (SF, ESF, Unframed or No Activity).
Code Type	Type of T1 line coding used (AMI, B8ZS, AMI : ZBTSI or B8ZS : ZBTSI). The latter two conditions indicate the line code that is being received when the HiGain system is set to its ZBTSI mode. In either the AMI or the B8ZS conditions, the code type displays the user-selected code, as opposed to the type of code that is actually being received. (The user-selected code is displayed when in the Auto mode.)
HLU/Ver w.x-y	"w.x" = software version number of the HLU-388, List 2D. "y" = list number of HLU-388, List 2D.
HRU/Ver a.b-c	"a.b" = software version number of the HRU-412. "c" = list number of HRU-412.

TABLE 10. HLU-388, LIST 2D FOUR-CHARACTER FRONT PANEL MESSAGES

Message	*Full Name*	*Description*
CREM	Customer Remote Loopback	Signal from customer is looped back to customer at HLU-388.
NLOC	Network Local Loopback	DSX-1 signal is looped back to DSX-1 at HLU.
CLOC	Customer Local Loopback	Signal from customer is looped back to customer at HRU-412.
NREM	Network Remote Loopback	DSX-1 signal is looped back to DSX-1 at HRU.
SMJK	Remote Smart-Jack Loopback	DSX-1 signal is looped back to DSX-1 at HRU.
TLOS	Transmit Loss Of Signal	HRU is in a logic loopback state, caused by a loss of its DS1 input from the CI, when ENAbled at the HRU via its TLOS switch option.
FERR	Framing Bit Error occurred	Framing bit error occurred at HLU DSX-1 input.
LBPV	Local Bipolar Violation	A bipolar violation has been received at the DSX-1 input to the HLU-388.
SIG1	Signal 1	The HLU and HRU transceivers are trying to establish contact with each other on loop 1.
SIG2	Signal 2	The HLU and HRU transceivers are trying to establish contact with each other on loop 2.
ACQ1	Acquisition 1	The HLU and HRU multiplexers are trying to establish synchronization over loop 1.
ACQ2	Acquisition 2	The HLU and HRU multiplexers are trying to establish synchronization over loop 2.
H1ES	HDSL CRC Error Channel 1	HLU HDSL loop 1 CRC error.
H2ES	HDSL CRC Error Channel 2	HLU HDSL loop 2 CRC error.
ARM	HiGain System is Armed	Armed and ready to respond to Intelligent Repeater loop codes.
ACO	Alarm CutOff	A minor alarm occurred and was retired to an ACO condition, after pressing the SEL button on the HLU front panel.
SELF-TEST	Self-test	The HLU is in a self-test mode. This occurs every power On/Off cycle.
ALRM	Alarm condition exists	A minor alarm condition is in effect.
1=xx	HDSL Loop 1 Margin	Indicates the power of the received HDSL signal on loop 1 relative to noise. Any value of “06” or greater is adequate for reliable system operation.
2=yy	HDSL Loop 2 Margin	Indicates the power of the received HDSL signal on loop 2 relative to noise. Any value of “06” or greater is adequate for reliable system operation.

Table continued on next page

TABLE 10. HLU-388, LIST 2D FOUR-CHARACTER FRONT PANEL MESSAGES (CONTINUED)

Message	*Full Name*	*Description*
PWR FEED SHRT	Power Feed Short	Indicates a short between the two HDSL pairs. This same message can occur with an HRU which is drawing the correct amount of power over good cable pairs, but can not communicate with the HLU.
PWR FEED OPEN	Power Feed Open	Indicates an open circuit in the T and R of either HDSL pair.
PWR FEED OFF	Power Feed Off	HDSL span power has been turned off by setting the PWFD option to DIS.
BAD RT?	No response from HRU	The HLU does not receive any response from the HRU. Thus, the HRU's integrity is questionable.
VER XXXX	HLU software Version number	This is displayed during the System Settings review mode. Depress the **Mode** button for 3 seconds.
LIST XXXX	HLU's List number	Displayed during System Settings review mode defined above.
FRM	Frame: SF, ESF, UNFR, None	Defines the type of frame pattern being received from the DSX-1. Displayed during System Settings review mode defined above.
CODE	Line Code: AMI, B8ZS	The line code that HLU-388, List 2D is receiving at its DSX-1 interface, if the DS1 option is set to Auto. Otherwise, it mimics either of the other two DS1 line code settings, AMI or B8ZS. Displayed during System Settings review mode defined above.
LOSW	Loss of Sync Word	Indicates that one of the HDSL loops has lost sync. Causes a minor alarm.
LLOS	Local Loss of Signal	Indicates that no signal is detected at the DSX-1 input to the HLU. Causes a minor alarm.
RLOS	Remote Loss of Signal	Indicates that no signal is detected at the DSX-1 input to the HRU. Causes a minor alarm.
DS1	DS1 BPV Errors	Indicates that the number of BPVs at the HLU or HRU T1 inputs have exceeded the 24-hour ES threshold. Causes a minor alarm.
DS0	DS0 Blocked Channels	Indicates status of DS0 blocked channels. "None" indicates no channels are blocked. BLK indicates some channels are blocked.
MAL1	Margin Alarm Loop 1	The margin on HDSL loop 1 has dropped below the threshold (0 to 15 dB) set by the user.
MAL2	Margin Alarm Loop 2	The margin on HDSL loop 2 has dropped below the threshold (0 to 15 dB) set by the user.
MNGD	Managed	The HLU-388, List 2D is under control of the HMU-319 network management unit. In this state, the RS-232 maintenance port on the HLU-388's front panel is inoperative.

```
HI-GAIN HLU 388     MAINTENANCE TERMINAL MAIN MENU   (ver V3.0L-002D)
                         CIRCUIT ID#:

                    A. VIEW SPAN STATUS
                    B. SET CLOCK
                    C. SYSTEM SETTINGS
                    D. LOOPBACK MODE:  NONE
                    E. VIEW PERFORMANCE DATA
                    F. VIEW PERFORMANCE HISTORY
                    G. VIEW ALARM HISTORY
                    H. ENTER CIRCUIT ID #
```

Figure 7. HLU-388, List 2D Main Menu.

```
                              SPAN STATUS
                    ( HLU/ver3.0-002D: HRU/ver0.0-0000)
TIME: 00:16:04
DATE: 05/02/96                      CIRCUIT ID#:

ALARMS:   LAIS LLOS RLOS LOSW1 LOSW2
LOOPBACK: OFF
                         HLU                          HRU
                   HDSL-1       HDSL-2       HDSL-1       HDSL-2
                cur/min/max  cur/min/max  cur/min/max  cur/min/max
MARGIN:             N/A          N/A          N/A          N/A    dB
PULSE ATTN:         N/A          N/A          N/A          N/A    dB
PPM OFFSET:         N/A          N/A          N/A          N/A    ppm
24 HOUR ES:       00000        00000        00000        00000  seconds
24 HOUR UAS:      00607        00607        00073        00072  seconds

                                  DS1 STATUS
                              HLU                  HRU
24 HOUR BPV Seconds:        00154                00000
24 HOUR UAS Count:          00320                00469
Frame type:              No Activity              N/A
Code type:                  B8ZS                  N/A

                         (E)xit (C)lear (U)pdate
```

Figure 8. HLU-388, List 2D Non-Doubler Status Display.

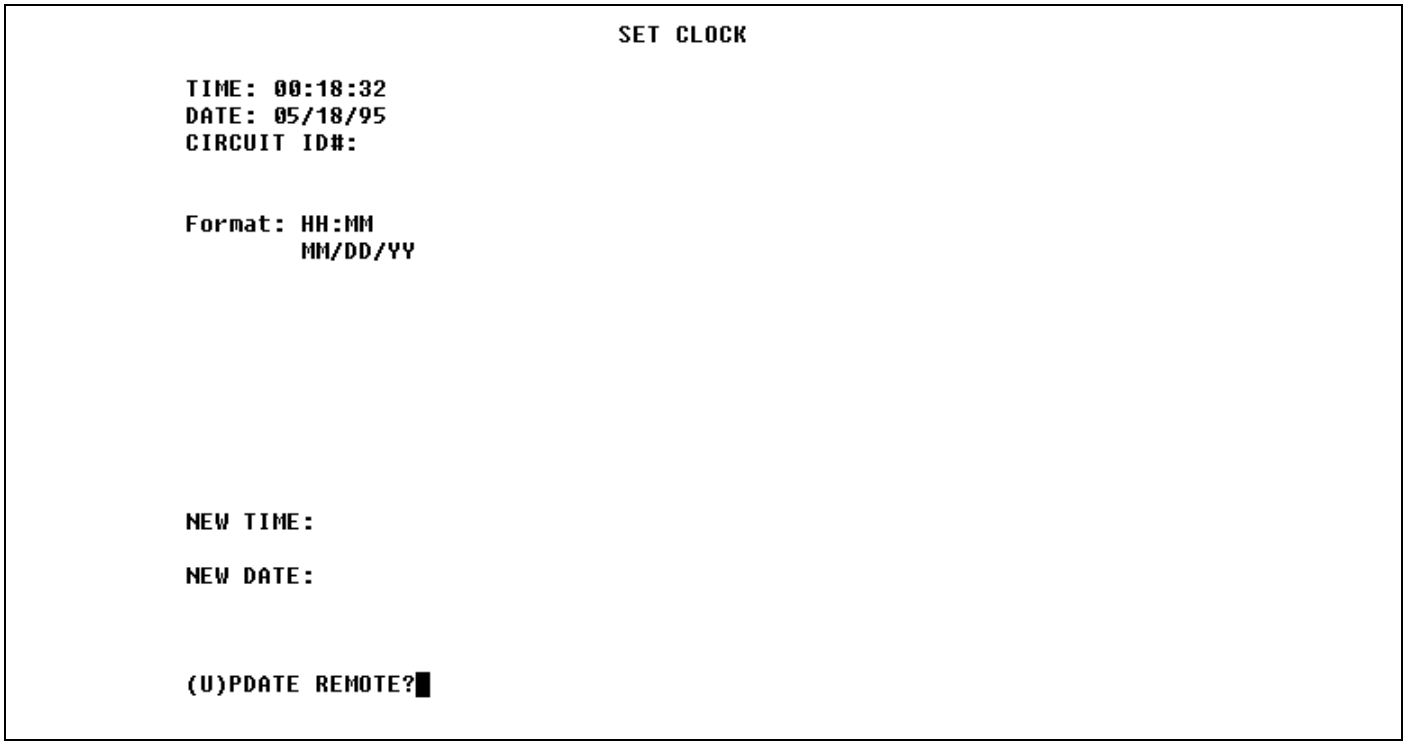

Figure 9. HLU-388, List 2D Set Clock Menu.

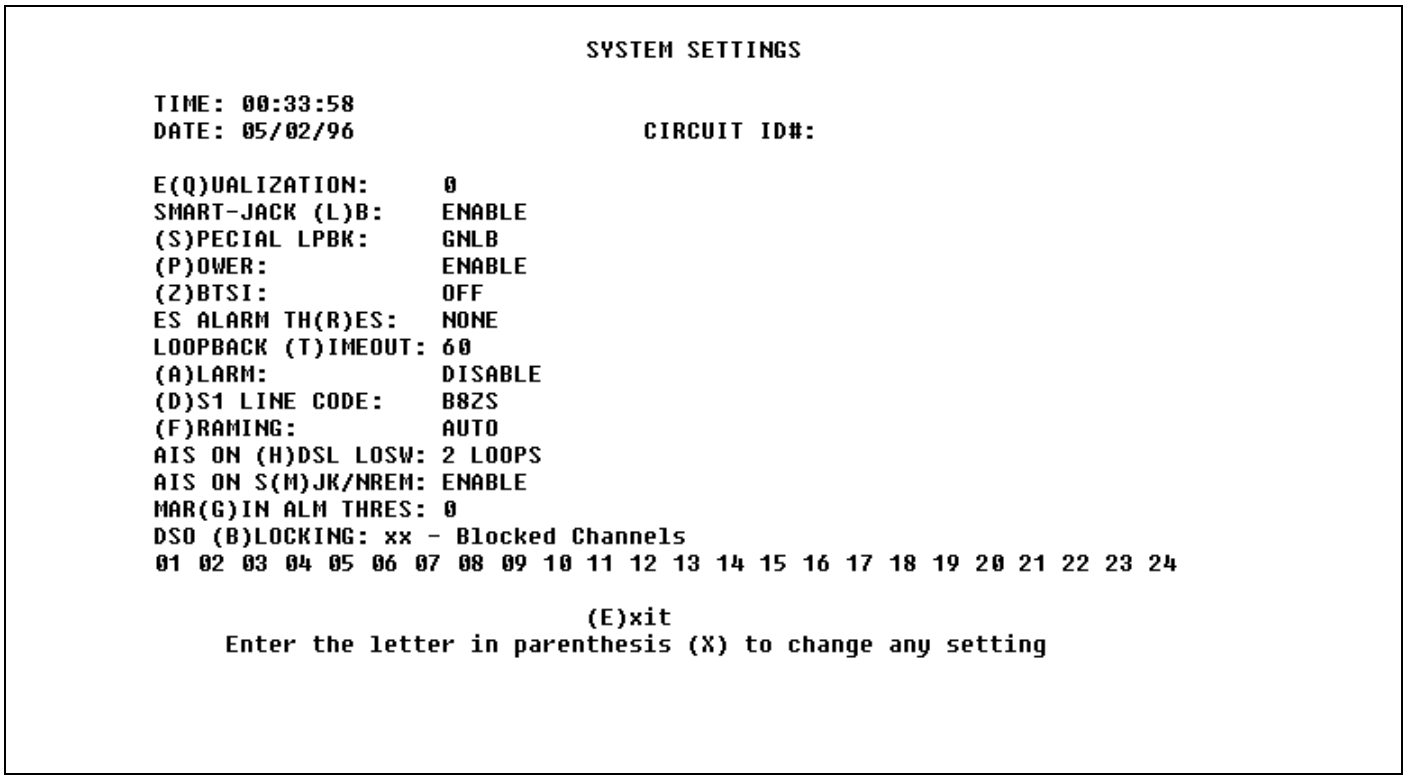

Figure 10. HLU-388, List 2D System Settings Menu.

```
                              LOOPBACK MENU

TIME: 00:22:51
DATE: 05/18/95
CIRCUIT ID#:


                        A. DISABLE LOOPBACKS
                        B. NETWORK LOOP HLU          (NLOC)
                        C. NETWORK LOOP HRU          (NREM)
                        G. CUSTOMER LOOP HLU         (CREM)
                        H. CUSTOMER LOOP HRU         (CLOC)




                                 (E)xit
```

Figure 11. HLU-388, List 2D Non-Doubler Loopback Menu.

```
Date: 05/18/95            PERFORMANCE DATA
CIRCUIT ID#:
                   ERRORED SECONDS/UNAVAILABLE SECONDS

                 DS1              HDSL-1             HDSL-2
            HLU      HRU      HLU      HRU      HLU      HRU
20:30    000/000  000/000  000/000  000/000  000/000  000/000
20:45    000/000  000/000  000/000  000/000  000/000  000/000
21:00    000/000  000/000  000/000  000/000  000/000  000/000
21:15    000/000  000/000  000/000  000/000  000/000  000/000
21:30    000/000  000/000  000/000  000/000  000/000  000/000
21:45    000/000  000/000  000/000  000/000  000/000  000/000
22:00    000/000  000/000  000/000  000/000  000/000  000/000
22:15    000/000  000/000  000/000  000/000  000/000  000/000
22:30    000/000  000/000  000/000  000/000  000/000  000/000
22:45    000/000  000/000  000/000  000/000  000/000  000/000
23:00    000/000  000/000  000/000  000/000  000/000  000/000
23:15    000/000  000/000  000/000  000/000  000/000  000/000
23:30    000/000  000/000  000/000  000/000  000/000  000/000
23:45    000/000  000/000  000/000  000/000  000/000  000/000
00:00    000/000  000/000  000/000  000/000  000/000  000/000
00:15    002/214  009/125  005/063  006/046  003/064  006/005

                        (E)xit (P)revious (N)ext
```

Figure 12. HLU-388, List 2D Non-Doubler Performance Data Screen.

```
Time: 00:26:39                    7 DAY HISTORY
CIRCUIT ID#:


                         ERRORED SECONDS/UNAVAILABLE SECONDS

                  DS1                    HDSL-1                  HDSL-2
            HLU          HRU          HLU          HRU          HLU          HRU
05/11   00000/00000 00000/00000 00000/00000 00000/00000 00000/00000 00000/00000
05/12   00000/00000 00000/00000 00000/00000 00000/00000 00000/00000 00000/00000
05/13   00000/00000 00000/00000 00000/00000 00000/00000 00000/00000 00000/00000
05/14   00000/00000 00000/00000 00000/00000 00000/00000 00000/00000 00000/00000
05/15   00000/00000 00000/00000 00000/00000 00000/00000 00000/00000 00000/00000
05/16   00000/00000 00000/00000 00000/00000 00000/00000 00000/00000 00000/00000
05/17   00000/00000 00000/00000 00000/00000 00000/00000 00000/00000 00000/00000
current 00002/00214 00009/00125 00005/00063 00006/00046 00003/00064 00006/00005




                                    (E)xit
```

Figure 13. HLU-388, List 2D Non-Doubler 7-Day Performance History Screen.

```
                              ALARM HISTORY

TIME: 00:28:24
DATE: 05/18/95
CIRCUIT ID#:

Type              First              Last               Current        Count
LOS, DS1-HLU      05/18/95-00:00     05/18/95-00:00     OK             001
LOS, DS1-HRU      05/18/95-00:00     05/18/95-00:02     OK             002
LOSW, HDSL1       05/18/95-00:00     05/18/95-00:14     OK             003
LOSW, HDSL2       05/18/95-00:00     05/18/95-00:14     OK             003
ES, HDSL1                                               OK             000
ES, HDSL2                                               OK             000
MARGIN L1         05/18/95-00:00     05/18/95-00:15     OK             004
MARGIN L2         05/18/95-00:00     05/18/95-00:01     OK             002
PWR-OPEN          05/18/95-00:01     05/18/95-00:15     OK             004
PWR-SHRT          05/18/95-00:00     05/18/95-00:00     OK             001

LAST CLEARED:  NONE


                         (E)xit (C)lear (U)pdate
```

Figure 14. HLU-388, List 2D Non-Doubler Alarm History Screen.

C. APPLICATIONS USING HIGAIN DOUBLERS (HDU-451)

17. DOUBLER DEPLOYMENT RULES

17.01 For doubler applications, one or two doublers may be used in the HDSL loops between the HLU-388, List 2D and the HRU-412. When using two doublers in a HDSL loop, the HRU-412 must be locally powered. The HLU-388, List 2D can be used with low power HDU-451, List 3, and List 4 doubler units and the HDU-439/437 "mini"-doublers over the entire CSA range in all 3 spans.

17.02 Use of the HLU-388, List 2D with the higher power HDU-451, List 1 or List 2 doubler is restricted per the following deployment rules:

1. If Span 1's loop resistance is known, then the maximum loop resistance of Span 2 is the smaller of either 800 ohms or the following calculated value:

   Maximum Span 2 Loop Resistance =
   [2600 - 4 (Span 1 Loop Resistance)] ohms
   For example, if Span 1 Loop Resistance = 550 ohms, then Span 2 Loop Resistance must be no more than 400 ohms. If Span 1 Loop Resistance = 400 ohms, then Span 2 Loop Resistance must be no more than 800 ohms.

2. If Span 2's loop resistance is known, then the maximum loop resistance of Span 1 is calculated as follows:

   Maximum Span 1 Loop Resistance =
   [650 - (Span 2 Loop Resistance/4)] ohms
   For example, if Span 2 Loop Resistance = 700 ohms, then Span 1 Loop Resistance must be no more than 475 ohms.

Note: The Span Resistance formulas in Rules 1 and 2 above illustrate that Span 1's resistance has four times the effect on the total circuit's range than does Span 2's resistance. In other words, if Span 1 can be reduced by 50 ohms, Span 2 can be increased by 200 ohms. So, always minimize the length of Span 1.

3. Only HRU-412 units with list numbers greater than 5 can be used. Thus, while Lists 1, 2, 3, 3A, 4, and 5 can not be used, Lists 6, 7, 8 and greater can.
4. The HRU-412 CPE current option must be set to 0 mA. Its 60 mA CPE current switch must be set to 0 mA, or, its card edge pins must be strapped for 0 mA in the enclosure that provides these strapping options.
5. In two-doubler applications, the first doubler (the one nearest the HLU) can be a List 1 or List 2. The second doubler, however, must be a List 3 unit.

18. POWER CONSUMPTION

18.01 The maximum current drain is the current drawn from the shelf power supply when it is at minimum voltage (-42.5 Vdc) under a worst case application. The worst case application for the HLU-388, List 2D occurs on a loop with one HDU-451 doubler, four 9000-foot #26 AWG spans, and an HRU-412 that is providing 60 mA of CPE current. Under these conditions, the HLU-388, List 2D current drain from the -42.5 Vdc battery is 0.6 A. CO current and other related power parameters for various doubler applications are listed in Table 11.

18.02 The maximum HLU-388, List 2D power dissipation is the power that is converted into heat within the unit. It contributes to the total heat generated and is used to determine the maximum number of shelves per bay that do not exceed the maximum power dissipation density in Watts/sq. ft.

18.03 In CO locations, the maximum power dissipation for open-faced, natural convection cooled mountings is 120 Watts/sq. ft., as stated in NEBS standard TR-NWT-000063 Section 4.2.3. The footprint of a 28-slot HLU-388 shelf is 7.024 sq. ft. Thus, the maximum allowable dissipation is 840 W, at 9 Watts maximum per slot. This limits the number of HLU-388, List 2D units per bay to 94.

18.04 The thermal loading limitations imposed when using the HLU-388, List 2D in a Controlled Environmental Vaults (CEV) or other enclosures are determined by applying the HLU-388, List 2D power parameters to the manufacturer requirements for each specific housing.

TABLE 11. HLU-388, LIST 2D DOUBLER POWER PARAMETERS

60 mA CPE Current	*CO Voltage Volts*	*CO Current Amps*	*Power Consumption Watts*	*HLU Power Dissipation Watts*	*Doubler Models HDU-439/437*
OFF	42.50	0.50	21.5	8	also HDU-451 List 1, 2, 3, 4
OFF	48.00	0.44	21.5	8	List 1, 2, 3, 4
OFF	56.00	0.38	21.5	8	List 1, 2, 3, 4
ON	42.50	0.6	25.5	9	also HDU-451 List 3, 4
ON	48.00	0.53	25.5	9	List 3, 4
ON	56.00	0.45	25.5	9	List 3, 4

18.05 The power consumption listed in Table 11 is the total power that the HLU-388, List 2D consumes or draws from its -48 Vdc shelf power source. This parameter is needed when the HLU-388, List 2D is remotely located to its serving CO. It determines the battery capacity required to maintain an 8-hour standby battery reserve for emergency situations. It thus limits the maximum number of plugs per remote enclosure. Use this data to perform this analysis on a case-by-case basis.

18.06 The maximum Current Drain is the maximum current drawn from the shelf power supply when it is at its minimum voltage (-42.5 V). It determines the shelf fusing requirements. All HLU-388 shelves are partitioned into two equal halves, each fused at 10 amps for a total of 20 amps per shelf. A fully loaded shelf draws 17 amps worst case (8.5 amps per fuse). This is within the 20 amp fuse limit.

18.07 Heat baffles should be placed between every other shelf, in racks containing more than two shelves. This technique deflects the rack heat outward and reduces thermo stress on the plugs.

19. LOOPBACK OPERATION

19.01 The HiGain system has a family of loopback options. The most important of these is the Smart-Jack loopback which enables the HRU-412 to respond to the standard (2/3 in 5) Smart-Jack in-band loopback codes. This option can be ENAbled or DISabled from either the front panel settings or the terminal System Settings Menu screen.

19.02 In addition to the Smart-Jack loopback, the HiGain system can be configured for one of five special in-band loopback (SPLB) command sequences. These are selected from the SPLB user options shown in Table 1. The loopback locations are shown in Figure 15.

19.03 "GNLB" is the HiGain system Generic Loopback code. The GNLB allows in-band codes from the network to loop up either the HLU/NLOC (4 in 7) or the HRU/ NREM (3 in 7) toward the network. In addition, it allows in-band codes from the Network Interface (NI) to loop up the HLU/CREM (6 in 7) or the HRU/CLOC (5 in 7) toward the customer. For doubler applications, it permits looping doubler number 1 toward the network NDU1 (2 in 6) or toward the customer CDU1 (4 in 6). Doubler number 2 is looped toward the network with NDU2 (3 in 6) or toward the customer with CDU2 (5 in 6). Either loop-up condition is terminated (looped down) with the (3 in 5) loop-down code. All messages must be present for five seconds before the HiGain system will respond. Table 12 lists the test procedures that apply when using the GNLB mode.

19.04 The A1LB loopback selection complies with that proposed for HDSL systems in the T1/E-1.4/92 recommendation with the following additions (see Table 13):

- Query loopback
- IOR power-down
- Three loopback time-out choices
- Initiation from either end
- Repeating bit error signatures
- Alternate query loopback.

These additions make A1LB identical to the A2LB, but they retain separate identities to allow future T1/E1 enhancements to A1LB without affecting A2LB.

19.05 A2LB through A5LB are four special addressable repeater loopback functions, which are supported by the HLU-388, List 2D HiGain system. These loopbacks provide the HiGain system with sophisticated maintenance and troubleshooting tools. Table 14 through Table 17 list the details of these SPLB functions. A2LB and A5LB are patterned after the Teltrend addressable T1 repeater loopbacks. A3LB and A4LB are patterned after the Wescom addressable T1 repeater loopbacks. All four SPLBs have been enhanced to handle the specific requirements of the following HiGain System customers:

- A2LB (Teltrend) = Southwestern Bell
- A3LB (Wescom) = New England Telephone
- A4LB (Wescom Mod 1) = New York Telephone
- A5LB (Teltrend Mod 1) = Southern New England Telephone (SNET)

19.06 A5LB differs from A2LB in that A5LB does not block the arming code from exiting the HLU-388, List 2D into the network. A2LB can be configured to either block this arming code after two seconds and replace it with the AIS code, or, unblock it by executing the Far-End Activate code. Since A5LB never blocks the arming code from exiting the HLU-388, List 2D, it does not need this Far-End Activate code. A3LB differs from A4LB in that A3LB supports the additional (1 in 6) Smart-Jack loopback command.

19.07 Two additional loopback points are added for each doubler that is used, as shown in Figure 15. NDU1 and NDU2 are executed toward the network. CDU1 and CDU2 are toward the customer. All four loopbacks can be initiated by the 16-bit in-band commands in SPLB states A1LB, A2LB and A3LB as described in Tables 13, 14, and 15 respectively. NDU1 and NDU2, along with the rest of the loopbacks toward the network, can be issued from the Loopback Menu shown in Figure 23. (See paragraph 19.10 below for front panel-initiated loopbacks.) The simplest HiGain system includes two loopback locations: the HLU-388, List 2D and the HRU-412. The most complex HiGain system application includes the HLU-388, List 2D, HRU-412 and two in-line doublers. Refer to the PairGain HiGain Intelligent Repeater Application Note #910, Part #325-910-100, for more SPLB details.

19.08 When T1 loopback tests are performed on the HiGain system with metallic loopback connections at either end, the T1 code which exists at the metallic loopback interface may be different from the T1 code being received at the opposite end when the DS1 user code is set to Auto. This is caused by the fact that, in the Auto DS1 code mode, the HLU-388, List 2D and HRU-412 set their own codes independently of each other. Each end sets its transmit code to match its receive code. Thus if one end is receiving AMI and the other B8ZS, their codes are different. For example, if the HRU-412 has a metallic loopback, and the HLU-388, List 2D receive pattern code is first changed from AMI to B8ZS, and next, the all “0” pattern is sent into the HLU-388, List 2D, then the HLU-388, List 2D changes to its B8ZS mode while the HRU-412 remains in its AMI mode, and thus loops back the all “0” pattern. This causes the HRU-412 to indicate an LOS condition, which then causes the HLU-388, List 2D to output the AIS pattern.

19.09 The HiGain system may take longer than normal to respond to in-band loopback commands when its framing mode is set to UNFR and the in-band commands are sent in either an SF or ESF mode. The frame bits override the command bits and cause errors in the command sequence. These errors cause the HiGain system to reject some sequences. This can extend the detection interval.

19.10 Depressing both the **Mode** and **SEL** push buttons on the front panel for at least three seconds initiates a Manual Loopback session. This session allows the user to select one of eight HiGain system loopbacks. The message, "MAN LPBK," appears on the front panel display followed by the message "NLO?" If the **SEL** push button is pressed at this time, an NLOC loopback is executed, changing the message from "NLO?" to "NLOC." If the **Mode** button is pressed instead of the **SEL** push button, "NLO?" is replaced by "ND1?" This now allows an NDU1 loopback to be executed (if it is a doubler application) with the **SEL** push button. If this same routine is followed, all eight loopbacks (NLOC, NDU1, NDU2, NREM, CLOC, CDU2, CDU1, and CREM) are presented and can be initiated in the sequence listed. Pressing the **Mode** push button two more times yields the CRE and CLO loopback options in the sequence listed. This interactive push-button procedure permits any of the four HiGain loopbacks to be executed/activated. The next loopback option can be presented by pressing the **Mode** push button, however, the previously executed loopback will remain active until the **SEL** push button is pressed and a different loopback is activated. If, after 30 seconds, neither button is pressed and no loopback is in effect, the manual loopback session terminates and the normal margin displays reappear. If any loopback is in effect, the 30-second time-out is inhibited. The active loopback and the manual loopback session continue until the loopback times out in accordance with the user-selected LBTO setting. Only one loopback can exist at any given time. Pressing both **Mode** and **SEL** buttons again for three seconds terminates any active loopback, ends the Manual Loopback session, and returns the display to normal mode. Note that these same loopbacks can be initiated from the RS-232 maintenance port by choosing the Loopback Mode, option "D," from the Main Menu. This displays the Loopback Menu (see Figure 23), from which any of the eight loopbacks can be initiated/terminated.

20. TESTING

20.01 Table 12 through Table 17 provide step-by-step test procedures for the HLU-388, List 2D as a function of the loopback option selected. These procedures allow verification of the integrity of the HDSL channels at every module location as well as the DS1 channels to the customer and the local DSX-1 interface.

20.02 The HLU-388, List 2D 4-character front panel display has many useful system diagnostic messages, which are listed in Table 18. The display turns on when power is initially applied to the HLU-388, List 2D. In order to conserve power, it remains on for only five minutes when neither the **Mode** or **SEL** buttons are pressed. The use of either button activates the 4-character display and restarts the 5-minute power control timer.

20.03 If trouble is encountered on the HLU-388 List 2D DSX-1 interface, verify that the HLU-388, List 2D is making a positive connection with the mounting assembly's connector. Also, verify that the equalizer is set to EXT for driving external equalizers or per the equalization settings of Table 1 for internal equalization. All installations should be set to the largest value that does not exceed the distance from the DSX-1 to the shelf.

20.04 The transmit and receive DSX-1 ports have splitting access and bridging miniature 210-series jacks, as shown in Figure 2. Connecting one cable between the two Bridging jacks, and another between the two Line jacks, splits the XMT and RCV and creates metallic loopbacks toward both the DSX-1 and the HLU-388, List 2D. If plugs are inserted into both Line jacks, the BRG jacks can be used to send and receive test patterns toward the DSX-1.

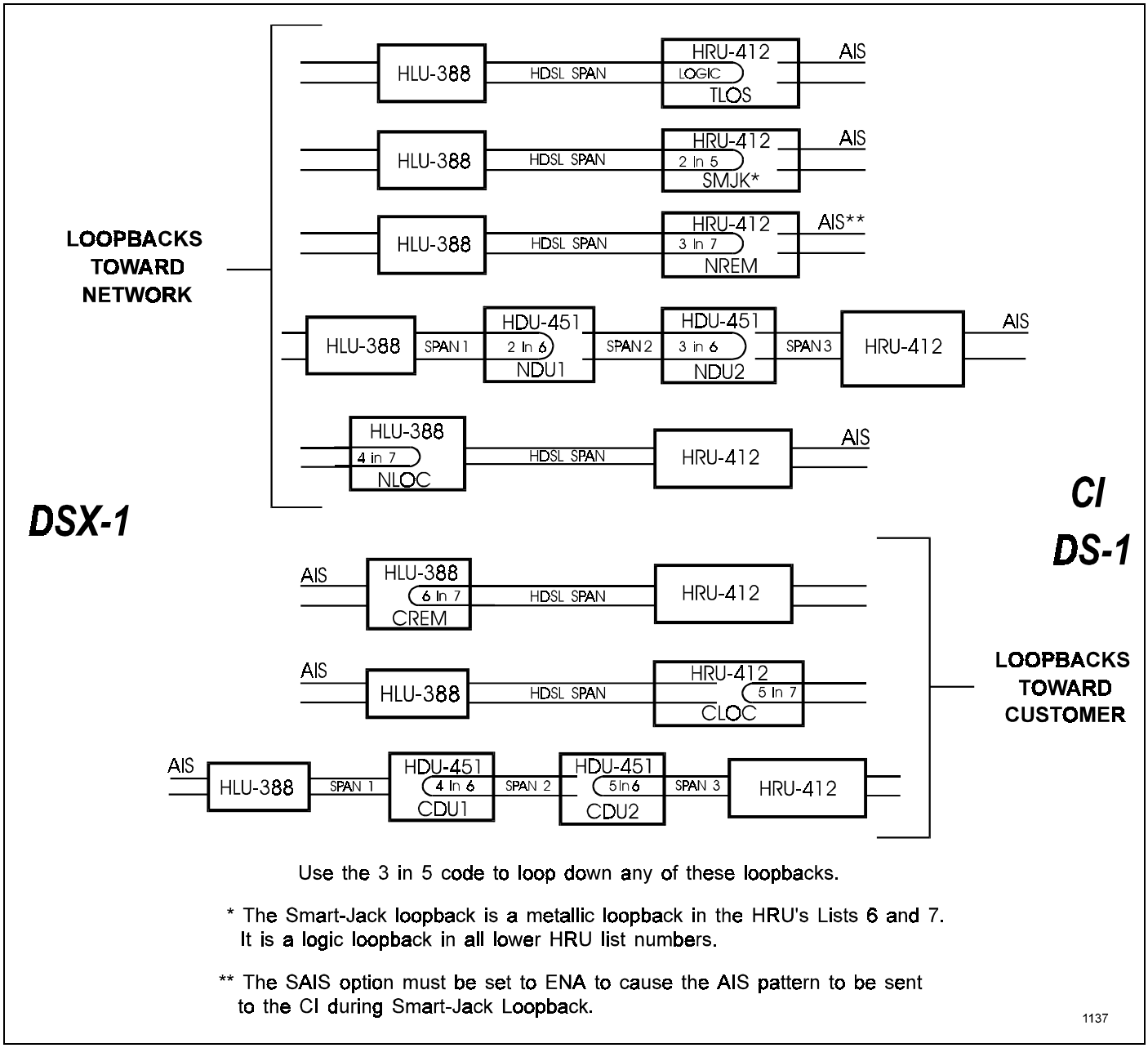

Figure 15. HLU-388 Doubler Loopback Configurations. The most important of the HiGain family of loopback options is the Smart-Jack loopback, which emulates the functions of a standard NID.

TABLE 12. HLU-388 GNLB TEST PROCEDURES

Step	*Action*
1	Have the CO tester send the HRU-412 (3 in 7) in-band loop-up code for five seconds. Observe that the HLU-388, List 2D displays the "NREM" message indicating an HRU-412 loopback is in effect (see Figure 15).
2	Have the CO tester transmit a DSX-1 test signal into the HLU-388, List 2D and verify that the returned (looped) signal is error free.
3	If the above test fails, have the CO tester transmit the (3 in 5) in-band loop-down code. Verify that the HLU-388, List 2D display returns to normal.
4	Have the CO tester send the HLU-388, List 2D (4 in 7) in-band loop-up code for five seconds. Observe that the HLU-388, List 2D displays the "NLOC" message, which indicates that an HLU-388, List 2D loopback is in effect.
5	Repeat Step 2. If the test passes, the problem is in the cable pair or the HRU-412. If it fails, the problem is in the CO equipment.
6	The NREM and NLOC loopbacks can also be initiated from the front panel of the HLU-388, List 2D with the Mode and SEL push buttons (see Section C Paragraph 19.10).
7	The HLU-388, List 2D can be looped up from the remote location (CREM) by issuing the (6 in 7) command at the HRU-412 DS1 input port.
8	The HRU-412 can be looped up from the remote location (CLOC) by issuing the (5 in 7) command at the HRU-412 DS1 input port.
9	Doubler number 1 can engage loopback from the remote location (CDU1) by issuing the (4 in 6) loopback command at the HRU-412 DS1 input port.
10	Doubler number 1 can engage loopback from the local location (NDU1) by issuing the (2 in 6) loopback command at the HLU-388, List 2D DS1 input port.
11	Doubler number 2 can engage loopback from the remote location (CDU2) by issuing the (5 in 6) loopback command at the HRU-412 DS1 input port.
12	Doubler number 2 can engage loopback from the local location (NDU2) by issuing the (3 in 6) loopback command at the HLU-388, List 2D DS1 input port.

TABLE 13. HLU-388 A1LB TEST PROCEDURES

Step	*Action*
1	Send the in-band Arming and NI LPBK code 11000 into the HLU-388, List 2D, for at least five seconds or at least four repetitions of the 16-bit ESF data link Arming code 1111 1111 0100 1000 (FF48). (Left bit arrives first.)
2	Monitor the output of the HLU-388, List 2D for the return of the pattern. Return of pattern indicates that either the HRU-412 has looped up (if the Smart-Jack Loopback option is ENAbled) or an external NI has looped up (if the Smart-Jack Loopback option is DISabled), and the HLU-388, List 2D and HRU-412 units have been Armed. Verify that the HLU-388, List 2D display intermittently indicates "Arm" and also "SMJK," if the HRU-412 is in loopback. Also verify, if possible, that the Loopback LED of the HRU-412 is flashing (indicating that the HRU-412 is armed), or, that the Loopback LED lights steadily (indicating that the HRU-412 is both armed and in loopback).
3	Once armed, the HLU-388, List 2D can be looped back (NLOC in Figure 15) by sending IOR LPBK activation code 1101 0011 1101 0011 (D3D3) for at least five seconds. The tester observes the following activation response: • Two seconds of AIS (all ones), followed by: • Five seconds of returning data pattern, followed by: • 231 logic errors (including the frame bit) occur in the returned pattern (10 errors if ILR-1 was sent, 200 errors if ILR-20 was sent, and 20 errors if ILR-2 was sent), followed by: • Normal looped data. ***Note:*** This error pattern will repeat every 20 seconds, as long as the IOR loopback pattern is being sent. This same 20-second repeat scenario also applies to the Time-out Override and Query commands. It also applies (with the appropriate number of bit errors) to the other ILR commands. The HLU-388, List 2D is now in Logic Loopback (NLOC of Figure 15). The display on the HLU-388, List 2D periodically shows "NLOC" and "Arm" (the HLU-388, List 2D is still armed) in addition to the margin displays. The Loopback Time-out option (which is user settable to "None," 20, 60, or 120 minutes) determines the duration of this loopback, unless it is overridden by the Time-out Override command or a loop-down command is sent. If the Time-out Override code 1101 0101 1101 0110 (D5D6) is received, the "activation sequence," described in "3" above, is repeated, and the automatic timed expiration of the loopback is inhibited. If this Time-out Override is sent, then the only way to loop the HLU-388, List 2D down is to issue the IR LPDN code 1001 0011 1001 0011 (9393) or to issue the NI LPDN and Disarm code 11100. The automatic time-out timer is restored during subsequent loopback sessions.
4	Upon completion, the tester sends the IOR LPDN code 1001 0011 1001 0011 (9393) to loop down the HLU-388, List 2D. The unit remains armed, however, as indicated by the "Arm" message on the HLU-388, List 2D and the flashing of the HRU-412 Loopback LED.

Table continued on next page

TABLE 13. HLU-388 A1LB TEST PROCEDURES (CONTINUED)

Step	Action
5	Using the following codes, a network tester can activate loopbacks NLOC or NREM or SMJK (if ENAbled, see Figure 15). A customer tester can activate loopbacks CLOC or CREM.

ADDRESSABLE 1 (A1LB) REPEATER LOOPBACK COMMANDS

ARMING or NI LPBK (in-band)	Arming code	11000 11000 ...
ARMING or NI LPBK (ESF data link)	Arming code	1111 1111 0100 1000 (FF48)*
IR LPDN or DISARM (in-band)	Disarming code	11100 11100 ...
DISARM (ESF data link)	Disarming code	1111 1111 0010 0100 (FF24)
IOR LPBK (NLOC and CREM 231 errors)	HLU Loop-up	1101 0011 1101 0011 (D3D3)
ILR-1 LPBK (NDU1 and CDU1 10-bit errors)	Doubler 1 Loop-up	1100 0111 0100 0001 (C741)
ILR-20 LPBK (NDU2 and CDU2 200-bit errors)	Doubler 2 Loop-up	1100 0111 0101 0100 (C754)
ILR-2 LPBK (NREM and CLOC 20-bit errors)	HRU Loop-up	1100 0111 0100 0010 (C742)
IR LPDN	Loop-down (HLU or HRU)	1001 0011 1001 0011 (9393)
IR QUERY LPBK	Query Loopback	1101 0101 1101 0101 (D5D5)
IR ALTERNATE QUERY LPBK	Alternate Query Loopback	1101 0101 1110 1010 (D5EA)
TIME-OUT OVERRIDE	Loopback Time-out Override	1101 0101 1101 0110 (D5D6)
FAR END NI ACTIVATE	Unblock AIS and pass 2 in 5	1101 0101 0101 0100 (C554)
IOR POWER-DOWN (HLU)	Removes HDSL line power	0110 0111 0110 0111 (6767)

Note: The left-most bit arrives first in all sequences. The detection algorithm functions reliably with a random 10^{-3} Bit Error Ratio (BER) on the facility. The IOR Power-down code must remain present for the duration of the power-down mode. When this code is removed, the HiGain system returns to its normal unlooped and unarmed state.

6	After testing is complete, send the universal Intelligent Repeater Loop-down (IR LPDN) code if the system is to loop down but remain Armed. Send the disarm code 11100 if all the equipment is to be looped down, disarmed, and returned to normal operation. Note that the Armed mode has an automatic time-out of 120 minutes.
7	All of the above loopbacks can also be initiated from the front panel of the HLU-388, List 2D with the Mode and SEL push buttons (see Section C Paragraph 19.10). *This is the HEX number for the 16 bit group.

TABLE 14. HLU-388 A2LB TEST PROCEDURES

Step	*Action*
1	Send the in-band Arming and NI LPBK code 11000 into the HLU-388, List 2D, for at least five seconds or at least four repetitions of the 16-bit ESF data link Arming code 1111 1111 0100 1000 (FF48). (Left bit arrives first.)
2	Monitor the output of the HLU-388, List 2D for the return of the pattern. Return of pattern indicates that either the HRU-412 has looped up (if the Smart-Jack Loopback option is ENAbled) or an external NI has looped up (if the Smart-Jack Loopback option is DISabled), and the HLU-388, List 2D and HRU-412 units have been Armed. Verify that the HLU-388, List 2D display intermittently indicates "Arm" and also "SMJK," if the HRU-412 is in loopback. Also verify, if possible, that the Loopback LED of the HRU-412 is flashing (indicating that the HRU-412 is armed), or, that the Loopback LED lights steadily (indicating that the HRU-412 is both armed and in loopback).
3	Once armed, the HLU-388, List 2D can be looped back (NLOC in Figure 15) by sending IOR LPBK activation code 1101 0011 1101 0011 (D3D3) for at least five seconds. The tester observes the following activation response: • Two seconds of AIS (all ones), followed by: • Five seconds of returning data pattern, followed by: • 231 logic errors (including the frame bit) occur in the returned pattern (10 errors if ILR-1 was sent, 200 errors if ILR-20 was sent, and 20 errors if ILR-2 was sent), followed by: • Normal looped data. ***Note:*** This error pattern will repeat every 20 seconds, as long as the IOR loopback pattern is being sent. This same 20-second repeat scenario also applies to the Time-out Override and Query commands. It also applies (with the appropriate number of bit errors) to the other ILR commands. The HLU-388, List 2D is now in Logic Loopback (NLOC of Figure 15). The display on the HLU-388, List 2D periodically shows "NLOC" and "Arm" (the HLU-388, List 2D is still armed) in addition to the margin displays. The Loopback Time-out option (which is user settable to "None," 20, 60, or 120 minutes) determines the duration of this loopback, unless it is overridden by the Time-out Override command or a loop-down command is sent. If the Time-out Override code 1101 0101 1101 0110 (D5D6) is received, the "activation sequence," described in "3" above, is repeated, and the automatic timed expiration of the loopback is inhibited. If this Time-out Override is sent, then the only way to loop the HLU-388, List 2D down is to issue the IR LPDN code 1001 0011 1001 0011 (9393) or to issue the NI LPDN and Disarm code 11100. The automatic time-out timer is restored during subsequent loopback sessions.
4	Upon completion, the tester sends the IOR LPDN code 1001 0011 1001 0011 (9393) to loop down the HLU-388, List 2D. The unit remains armed, however, as indicated by the "Arm" message on the HLU-388, List 2D and the flashing of the HRU-412 Loopback LED.

Table continued on next page

TABLE 14. HLU-388 A2LB TEST PROCEDURES (CONTINUED)

Step	Action
5	Using the following codes, a network tester can activate loopbacks NLOC or NREM or SMJK (if ENAbled, see Figure 15). A customer tester can activate loopbacks CLOC or CREM.

ADDRESSABLE 2 (A2LB) REPEATER LOOPBACK COMMANDS

ARMING or NI LPBK (in-band)	Arming code	11000 11000 ...
ARMING or NI LPBK (ESF data link)	Arming code	1111 1111 0100 1000 (FF48)*
IR LPDN or DISARM (in-band)	Disarming code	11100 11100 ...
DISARM (ESF data link)	Disarming code	1111 1111 0010 0100 (FF24)
IOR LPBK (NLOC and CREM 231 errors)	HLU Loop-up	1101 0011 1101 0011 (D3D3)
ILR-1 LPBK (NDU1 and CDU1 10-bit errors)	Doubler 1 Loop-up	1100 0111 0100 0001 (C741)
ILR-20 LPBK (NDU2 and CDU2 200-bit errors)	Doubler 2 Loop-up	1100 0111 0101 0100 (C754)
ILR-2 LPBK (NREM and CLOC 20-bit errors)	HRU Loop-up	1100 0111 0100 0010 (C742)
IR LPDN	Loop-down (HLU or HRU)	1001 0011 1001 0011 (9393)
IR QUERY LPBK	Query Loopback	1101 0101 1101 0101 (D5D5)
IR ALTERNATE QUERY LPBK	Alternate Query Loopback	1101 0101 1110 1010 (D5EA)
TIME-OUT OVERRIDE	Loopback Time-out Override	1101 0101 1101 0110 (D5D6)
FAR END NI ACTIVATE	Unblock AIS and pass 2 in 5	1101 0101 0101 0100 (C554)
IOR POWER-DOWN (HLU)	Removes HDSL line power	0110 0111 0110 0111 (6767)

Note: The left-most bit arrives first in all sequences. The detection algorithm functions reliably with a random 10^{-3} Bit Error Ratio (BER) on the facility. The IOR Power-down code must remain present for the duration of the power-down mode. When this code is removed, the HiGain system returns to its normal unlooped and unarmed state.

6	After testing is complete, send the universal Intelligent Repeater Loop-down (IR LPDN) code if the system is to loop down but remain Armed. Send the disarm code 11100 if all the equipment is to be looped down, disarmed, and returned to normal operation. Note that the Armed mode has an automatic time-out of 120 minutes.
7	All of the above loopbacks can also be initiated from the front panel of the HLU-388, List 2D with the Mode and SEL push buttons (see Section C Paragraph 19.10). *This is the HEX number for the 16 bit group.

TABLE 15. HLU-388 A3LB TEST PROCEDURES

<table>
<tr><th>Step</th><th>Action</th></tr>
<tr><td>1</td><td>The HLU-388, List 2D can be looped back (NLOC in Figure 15) by sending the Addressable Office Repeater (AOR) LPBK activation code 1111 1111 0001 1110 (FF1E) for at least five seconds. This causes the HLU-388, List 2D to enter its NLOC state (see Figure 15). The display on the HLU-388, List 2D alternates between NLOC (network local loop) and the margin displays. The Loopback Time-out option (which is user settable to “None,” 20, 60, or 120 minutes) determines the duration of this loopback, unless it is overridden by the reception of a second identical 16-bit loop-up command before the timer expires. When this time-out override state exists, the only way to loop the HLU-388, List 2D down is to issue one of the three loop-down commands listed in Step 2. The automatic time-out mode is restored during subsequent loopback sessions.</td></tr>
<tr><td>2</td><td>The following list summarizes the codes required to execute all the HiGain system loopbacks (see Figure 15). Note that all code sequences must be present for at least five seconds.

ABBREVIATIONS USED BELOW:
LU = Loop Up
LD = Loop Down
NI = Network Interface
CI = Customer Interface
ESF-DL = Extended Super Frame Data Link

ADDRESSABLE 3 (A3LB) REPEATER LOOPBACK COMMANDS
<table>
<tr><th>Position</th><th>Name</th><th>Code</th></tr>
<tr><td>HLU-388 LU from NI</td><td>NLOC</td><td>1111 1111 0001 1110 (FF1E)*</td></tr>
<tr><td>HLU-388 LU from CI</td><td>CREM</td><td>0011 1111 0001 1110 (3F1E)</td></tr>
<tr><td>HDU-451 DOUBLER 1 from NI</td><td>NDU1</td><td>1111 1111 0000 0100 (FF04)</td></tr>
<tr><td>HDU-451 DOUBLER 1 from CI</td><td>CDU1</td><td>0011 1111 0000 0100 (3F04)</td></tr>
<tr><td>HDU-451 DOUBLER 2 from NI</td><td>NDU2</td><td>1111 1111 0000 0110 (FF06)</td></tr>
<tr><td>HDU-451 DOUBLER 2 from CI</td><td>CDU2</td><td>0011 1111 0000 0110 (3F06)</td></tr>
<tr><td>HRU-412 LU from NI</td><td>NREM</td><td>1111 1111 0000 0010 (FF02)</td></tr>
<tr><td>HRU-412 LU from CI</td><td>CLOC</td><td>0011 1111 0000 0010 (3F02)</td></tr>
<tr><td>HRU-412 LU from NI</td><td>SMJK</td><td>11000 11000 11000 ...</td></tr>
<tr><td>HRU-412 LU from NI</td><td>SMJK</td><td>100000 100000 100000 ...</td></tr>
<tr><td>HRU-412 LU from NI (ESF-DL)</td><td>SMJK</td><td>1111 1111 0100 1000 (FF48)</td></tr>
<tr><td>HLU and HRU LD from NI or CI</td><td>Loop Down</td><td>11100 11100 11100 ...</td></tr>
<tr><td>HLU and HRU LD from NI or CI</td><td>Loop Down</td><td>100 100 100 ...</td></tr>
<tr><td>HLU and HRU LD from NI or CI (ESF-DL)</td><td>Loop Down</td><td>1111 1111 0010 0100 (FF24)</td></tr>
</table>
Note: The left-most bit arrives first in all sequences. The detection algorithm functions reliably with a random 10^{-3} Bit Error Ratio (BER) on the facility.</td></tr>
<tr><td>3</td><td>All of the above loopbacks can also be initiated from the front panel of the HLU-388, List 2D with the Mode and SEL push buttons (see Section C Paragraph 19.10). *This is the HEX number for the 16 bit group.</td></tr>
</table>

TABLE 16. HLU-388 A4LB TEST PROCEDURES

Step	Action
1	The HLU-388, List 2D can be looped back (NLOC in Figure 15) by sending the Addressable Office Repeater (AOR) LPBK activation code 1111 1111 0001 1110 (FF1E)for at least five seconds. This causes the HLU-388, List 2D to enter its NLOC state (see Figure 15). The display on the HLU-388, List 2D alternates between NLOC (network local loop) and the margin displays. The Loopback Time-out option (which is user settable to "None," 20, 60, or 120 minutes) determines the duration of this loopback, unless it is overridden by the reception of a second identical 16-bit loop-up command before the timer expires. When this time-out override state exists, the only way to loop the HLU-388, List 2D down is to issue one of the three loop-down commands listed in Step 2. The automatic time-out mode is restored during subsequent loopback sessions.
2	The following list summarizes the codes required to execute all the HiGain system loopbacks (see Figure 15). Note that all code sequences must be present for at least five seconds. ***ABBREVIATIONS USED BELOW:*** *LU = Loop Up* *LD = Loop Down* *NI = Network Interface* *CI = Customer Interface* *ESF-DL = Extended Super Frame Data Link*

ADDRESSABLE 4 (A4LB) REPEATER LOOPBACK COMMANDS

Position	Name	Code
HLU-388 LU from NI	NLOC	1111 1111 0001 1110 (FF1E)*
HLU-388 LU from CI	CREM	0011 1111 0001 1110 (3F1E)
HDU-451 DOUBLER 1 from NI	NDU1	1111 1111 0000 0100 (FF04)
HDU-451 DOUBLER 1 from CI	CDU1	0011 1111 0000 0100 (3F04)
HDU-451 DOUBLER 2 from NI	NDU2	1111 1111 0000 0110 (FF06)
HDU-451 DOUBLER 2 from CI	CDU2	0011 1111 0000 0110 (3F06)
HRU-412 LU from NI	NREM	1111 1111 0000 0010 (FF02)
HRU-412 LU from CI	CLOC	0011 1111 0000 0010 (3F02)
HRU-412 LU from NI	SMJK	11000 11000 11000 ...
HRU-412 LU from NI (ESF-DL)	SMJK	1111 1111 0100 1000 (FF48)
HLU and HRU LD from NI or CI	Loop Down	11100 11100 11100 ...
HLU and HRU LD from NI or CI	Loop Down	100 100 100 ...
HLU and HRU LD from NI or CI (ESF-DL)	Loop Down	1111 1111 0010 0100 (FF24)

Note: The left-most bit arrives first in all sequences. The detection algorithm functions reliably with a random 10^{-3} Bit Error Ratio (BER) on the facility).

3	All of the above loopbacks can also be initiated from the front panel of the HLU-388, List 2D with the Mode and SEL push buttons (see Section C Paragraph 19.10). *This is the HEX number for the 16 bit group.

TABLE 17. HLU-388 A5LB TEST PROCEDURES

Step	*Action*
1	Send the in-band Arming and NI LPBK code 11000 into the HLU-388, List 2D, for at least five seconds or at least four repetitions of the 16-bit ESF data link Arming code 1111 1111 0100 1000 (FF48). (Left bit arrives first.)
2	Monitor the output of the HLU-388, List 2D for the return of the pattern. Return of pattern indicates that either the HRU-412 has looped up (if the Smart-Jack Loopback option is ENAbled) or an external NI has looped up (if the Smart-Jack Loopback option is DISabled) and the HLU-388, List 2D and HRU-412 units have been Armed. Verify that the HLU-388, List 2D display intermittently indicates "Arm" and also "SMJK," if the HRU-412 is in loopback. Also verify, if possible, that the Loopback LED of the HRU-412 is flashing (indicating that the HRU-412 is armed), or, that the Loopback LED lights steadily (indicating that the HRU-412 is both armed and in loopback).
3	Once armed the HLU-388, List 2D can be looped back (NLOC in Figure 15) by sending the IOR LPBK activation code 1101 0011 1101 0011 (D3D3) for at least five seconds. The tester observes the following activation response: • Two seconds of AIS (all ones), followed by: • Five seconds of returning data pattern, followed by: • 231 logic errors (including the frame bit) occur in the returned pattern (10 errors if ILR-1 was sent, 200 errors if ILR-20 was sent, and 20 errors if ILR-2 was sent), followed by: • Normal looped data. ***Note:*** This error pattern will repeat every 20 seconds, as long as the IOR loopback pattern is being sent. This same 20-second repeat scenario also applies to the Time-out Override and Query commands. It also applies (with the appropriate number of bit errors) to the other ILR commands. The HLU-388, List 2D is now in Logic Loopback (NLOC of Figure 15). The display on the HLU-388, List 2D periodically shows "NLOC" and "Arm" (the HLU-388, List 2D is still armed) in addition to the margin displays. The Loopback Time-out option (which is user settable to "None," 20, 60 or 120 minutes) determines the duration of this loopback, unless it is overridden by the Time-out Override command or a loop-down command is sent. If the Time-out Override code 1101 0101 1101 0110 (D5D6) is received, the "activation sequence," described in "3" above, is repeated, and the automatic timed expiration of the loopback is inhibited. If this Time-out Override is sent, then the only way to loop the HLU-388, List 2D down is to issue the Intelligent Repeater Loop-down (IR LPDN) code 1001 0011 1001 0011 (9393) or to issue the NI LPDN and Disarm code 11100. The automatic time-out timer is restored during subsequent loopback sessions.
4	Upon completion, the tester sends the IOR LPDN code 1001 0011 1001 0011 (9393) to loop down the HLU-388, List 2D. The unit remains armed, however, as indicated by the "Arm" message on the HLU-388, List 2D and the flashing of the HRU-412 Loopback LED.

Table continued on next page

TABLE 17. HLU-388 A5LB TEST PROCEDURES (CONTINUED)

Step	Action
5	Using the following codes, a network tester can activate loopbacks NLOC or NREM or SMJK (if ENAbled) (see Figure 15). A customer tester can activate loopbacks CLOC or CREM.

ADDRESSABLE 5 (A5LB) REPEATER LOOPBACK COMMANDS

ARMING or NI LPBK (in-band)	Arming code	11000 11000 ...
ARMING or NI LPBK (ESF data link)	Arming code	1111 1111 0100 1000 (FF48)*
IR LPDN or DISARM (in-band)	Disarming code	11100 11100 ...
DISARM (ESF data link)	Disarming code	1111 1111 0010 0100 (FF24)
IOR LPBK (NLOC and CREM 231 errors)	HLU Loop-up	1101 0011 1101 0011 (D3D3)
ILR-1 LPBK (NDU1 and CDU1 10-bit errors)	Doubler 1 Loop-up	1100 0111 0100 0001 (C741)
ILR-20 LPBK (NDU2 and CDU2 200-bit errors)	Doubler 2 Loop-up	1100 0111 0101 0100 (C754)
ILR-2 LPBK (NREM and CLOC 20-bit errors)	HRU Loop-up	1100 0111 0100 0010 (C742)
IR LPDN	Loop-down (HLU or HRU)	1001 0011 1001 0011 (9393)
IR QUERY LPBK	Query Loopback	1101 0101 1101 0101 (D5D5)
IR ALTERNATE QUERY LPBK	Alternate Query Loopback	1101 0101 1110 1010 (D5EA)
TIME-OUT OVERRIDE	Loopback Time-out Override	1101 0101 1101 0110 (D5D6)
IOR POWER-DOWN (HLU)	Removes HDSL line power	0110 0111 0110 0111 (6767)

Note: The left-most bit arrives first in all sequences. The detection algorithm functions reliably with a random 10^{-3} Bit Error Ratio (BER) on the facility. The IOR Power-down code must remain present for the duration of the power-down mode. When this code is removed, the HLU-388, List 2D returns to its normal unlooped and unarmed state.

6	After testing is complete, send the universal Intelligent Repeater Loop-down (IR LPDN) code if the system is to loop down but remain Armed. Send the disarm code 11100 if all the equipment is to be looped down, disarmed, and returned to normal operation. Note that the Armed mode has an automatic time-out of 120 minutes.
7	All of the above loopbacks can also be initiated from the front panel of the HLU-388, List 2D with the Mode and SEL push buttons (see Section C Paragraph 19.10). *This is the HEX number for the 16 bit group.

21. SYSTEM MAINTENANCE MENU SCREENS

21.01 Figure 16 is the Maintenance Terminal Main Menu screen. Its eight sub-menus provide many useful provisioning, test and monitoring tools.

21.02 Selection "H" from the Main Menu screen allows the Circuit ID number to be set. It is limited to 24 alphanumeric characters. It, like the system settings, is stored in NVRAM and thus remains when power is lost. Note that the Circuit ID number is not available at the HRU-412 Maintenance Port.

21.03 Figure 17 through Figure 20 show the HLU-388 List 2D Span Status screens for two-doubler applications. The Span 1 screen contains data on the two HDSL loops between the HLU-388, List 2D and the first doubler. The Span 2 screen refers either to the loops between the first doubler and the HRU-412, for one-doubler circuits, or, to the loops between the first and second doublers, for two-doubler circuits. The Span 3 screen refers to the loops between the second doubler and the HRU-412, for two-doubler circuits. All status screens contain the same DS1 interface information.

21.04 Figure 21 shows the Set Clock Menu screen. The Time and Date are both set with this menu. Set the hours and minutes, using the military (24-hour) convention. Setting the seconds is optional. Enter the date in the sequence and format shown. List 1 HRU-412 units, having software versions 6.4 and above, and all HRU-412 units with list numbers greater than 5, can be set to the same time and date as the HLU-388, List 2D by entering a **U** to the "Update Remote" query. All time information is lost when power is removed. The last date, however, is retained in NVRAM and reappears when power is restored.

21.05 Figure 22 shows the System Settings Menu screen. All 14 user options can be set from this screen. To change any option, enter the character key which is shown inside the parentheses within each parameter description. This causes the screen to refresh with the new. After all parameters have been selected, press **E** (Exit) then **C** (Confirm). The newly selected parameters are now activated.

21.06 Figure 23 shows the Loopback Menu screen for a two-doubler system. Each of the four modules can be looped back toward the network or the customer from this screen. NDU2 and CDU2 are not available for one-doubler applications and only NLOC, NREM, CLOC and CREM are available for non-doubler applications.

21.07 Figure 24 through Figure 27 show the Performance Data screens for doubler applications. The "Errored Seconds" and "Unavailable Seconds" for both HDSL loops and each T1 input are listed at 15-minute intervals over a four-hour time period. The Span 1 screen contains data on the two HDSL loops between the HLU-388, List 2D and the first doubler (HDU1). The Span 2 screen refers either to the loops between the first doubler (HDU1) and the HRU-412, for one-doubler circuits, or, to the loops between the first and second doublers (HDU1 and HDU2), for two-doubler circuits. The Span 3 screen refers to the loops between the second doubler and the HRU-412, for two-doubler circuits. All status screens contain the same DS1 interface errors. Earlier and later data, in four-hour chunks on six different screens per span, can be accessed by pressing **P** (Previous) or **N** (Next) respectively. Performance data from the different spans can be accessed by entering **S** (Span). All of the counters can be set to "0" by pressing **C** (Clear) from the HLU-388, List 2D Span Status screen shown in Figure 17 through Figure 20. Note that since the HLU-388, List 2D is considered the master module, this clears *all* performance data screens at both the HLU-388, List 2D and the HRU-412. The RS-232 terminal interface at the HRU-412 does not allow the counters to be cleared.

21.08 Figure 28 through Figure 31 show the 7-Day Performance History screens for doubler applications. The "Errored Seconds" and "Unavailable Seconds" for both HDSL loops and each of the two DS1 inputs are listed for the current and previous seven days. The Span 1 screen contains data on the two HDSL loops between the HLU-388, List 2D and the first doubler (HDU1). The Span 2 screen refers either to the loops between the first doubler (HDU1) and the HRU-412, for one-doubler circuits, or, to the loops between the first and second doublers (HDU1 and HDU2), for two-doubler circuits. The Span 3 screen refers to the loops between the second doubler and the HRU-412 for two-doubler circuits. All status screens contain the same DS-1 interface errors. All of the counters can be set to "0" by pressing **C** (Clear) on the HLU-388, List 2D Span Status screen (see Figure 17 through Figure 20). Note that since the HLU-388, List 2D is considered the master module, this clears *all* performance screens at both the HLU-388, List 2D and the HRU-412. The RS-232 terminal interface at the HRU-412 does not allow the counters to be cleared.

21.09 Figure 32 through Figure 34 show the Alarm History screens for doubler applications. The alarms are defined in Section A Paragraph 4.01. The LOS and PWR system alarms are common to all spans. Only the LOSW, ES and Margin are span-specific alarms. The PWR-OPEN and PWR-SHRT alarms indicate alarm conditions on the HLU-388. Neither PWR alarm is available on the other spans. In Figure 32 through Figure 34, the "First" and "Last" columns contain the time and date stamp of the first and last occurrence of each alarm. The "Current" column shows the status of each alarm. The "Count" column lists the number of times each alarm occurred. All the data can be cleared by pressing **C** (Clear). The maximum non-overflowing count is 999. The Span 1 screen concerns alarms which occurred on the two HDSL loops between the HLU-388, List 2D and the first doubler (HDU1). The Span 2 screen refers either to the loops between the first doubler (HDU1) and the HRU-412, for one-doubler circuits, or, to the loops between the first and second doublers (HDU1 and HDU2), for two-doubler circuits. The Span 3 screen refers to the loops between the second doubler and the HRU-412, for two-doubler circuits.

TABLE 18. HLU-388, LIST 2D STATUS MENU MESSAGES

Message	*Full Name*	*Description*
***ALARMS*:**		
NONE	No Alarms	"None" indicates no alarms.
LLOS	Local Loss of Signal	No signal from HLU-388, List 2D local DSX-1 interface.
RLOS	Remote Loss of Signal	No signal from HRU-412 remote DS1 interface.
LOSW1	Loss of Sync Word 1	HDSL loop 1 has lost sync.
LOSW2	Loss of Sync Word 2	HDSL loop 2 has lost sync.
H1ES	HDSL Loop 1 Errored Second	Loop 1 CRCs have exceeded the user-selected ES threshold.
H2ES	HDSL Loop 2 Errored Second	Loop 2 CRC have exceeded the user-selected ES threshold.
DS1	Digital Service 1	T1 input BPVs, at either the HLU-388, List 2D or HRU-412, have exceeded the user-selected ES threshold.
RAIS	Remote Alarm Indicating Signal	Indicates an AIS (all "1") pattern is being transmitted from the remote T1 output port.
LAIS	Local Alarm Indicating Signal	Indicates an AIS (all "1") pattern is being transmitted from the local T1 output port.
MAL1	Margin Alarm 1	The margin on HDSL loop 1 has dropped below the threshold (0 to 15 dB) set by the user. Setting the threshold to 0 inhibits the margin alarm.
MAL2	Margin Alarm 2	The margin on HDSL loop 2 has dropped below the threshold (0 to 15 dB) set by the user. Setting the threshold to 0 inhibits the margin alarm.
CHREV	Channels Reversed	The loop 1 and loop 2 HDSL pairs are reversed at the HDU-451 or HRU-412 line input ports. Loop 1 is specified to carry the (-) simplex DC voltage, and loop 2 is specified to carry (+) simplex DC voltage.
ACO	Alarm CutOff	A minor alarm occurred and was retired to an ACO condition after pressing the SEL button on the HLU front panel.

Table continued on next page

TABLE 18. HLU-388, LIST 2D STATUS MENU MESSAGES (CONTINUED)

Message	*Full Name*	*Description*
LOOPBACKS:		
SMJK	Smart-Jack Loopback	The loopback at HRU-412 (remote) toward network (see Figure 15) initiated by either the (2 in 5) in-band loopback code or the out-of-band ESF data link loopback code.
NREM	Network Remote Loopback	The loopback at HRU-412 (remote) toward network (see Figure 15) initiated from CO (network) by either the Intelligent Line Repeater (ILR) number 2 code, the HLU-388 front panel Manual Loopback push buttons, the HRU-412 front panel push button, or the maintenance terminal.
NLOC	Network Local Loopback	The loopback at HLU-388, List 2D (local) toward network (see Figure 15) initiated from CO (network) by either the Intelligent Office Repeater (IOR) code, the HLU-388 front panel Manual Loopback push buttons, or the maintenance terminal.
NDU1	Network Doubler 1 Loopback	The loopback at doubler 1 toward network (see Figure 15) initiated by either the IOR code, the HLU-388 front panel Manual Loopback push buttons, or the maintenance terminal.
NDU2	Network Doubler 2 Loopback	The loopback at doubler 2 toward network (see Figure 15) initiated by either the IOR code, the HLU-388 front panel Manual Loopback push buttons, or the maintenance terminal.
CLOC	Customer Local Loopback	The loopback at HRU-412 (local) toward CI (see Figure 15) initiated from CPE (customer) by either the ILR number 2 code, the HLU-388 front panel Manual Loopback push buttons, or the maintenance terminal.
CREM	Customer Remote Loopback	The loopback at HLU-388, List 2D (remote) toward customer (see Figure 15) initiated by either the IOR code, the HLU-388 front panel Manual Loopback push buttons, or the maintenance terminal.
CDU1	Customer Doubler 1 Loopback	The loopback at doubler 1 toward CI (see Figure 15) initiated by either the ILR number 1 code, the HLU-388 front panel Manual Loopback push buttons, or the maintenance terminal.
CDU2	Customer Doubler 2 Loopback	The loopback at doubler 2 toward CI (see Figure 15) initiated by either the ILR number 20 code, the HLU-388 front panel Manual Loopback push buttons, or the maintenance terminal.
ARM	Armed	The HiGain system has detected the IR loopback (2 in 5) arming code.
TLOS	Transmit Loss of Signal Loopback	HRU-412 is in a logic loopback state, caused by a loss of its DS1 input from the CI when ENAbled at the HRU-412, List 6 and List 7, via its TLOS switch option.

TABLE 19. GLOSSARY OF HIGAIN TERMS

Term	*Definition*
Margins	Indicates the excess signal-to-noise ratio, at the HRU-412, HDU-451, or HLU-388, List 2D HDSL ports, relative to a 10^{-7} BER. First value is current margin. Second value is minimum margin since (C)leared last. Third value is maximum value since cleared. NA means Not Available (loop is not in-sync). The normal range of a typical margin is from 22 to 6 dB.
Pulse Attenuation	Indicates the attenuation of the 2B1Q pulse from the distant end. The HiGain system operates with pulse attenuation in excess of 30 dB. This value is related to the cable pair's 196 kHz loss. The pulse attenuation is a more direct indication of the loop attenuation to the 2B1Q signal than the 196 kHz loss. The normal range of pulse attenuation is from 1 to 32 dB.
PPM	Indicates the relative offset of the crystal oscillator in the HRU-412 from the HLU-388, List 2D crystal oscillator. Any value between -64 and +64 is adequate. Values outside this range indicate out-of-tolerance components or excessive temperature drift in critical components.
HDSL 24 Hours ES (Errored Seconds)	The number of 1-second intervals which contained at least 1 HDSL CRC error. This value is a running total of the last 24 hours.
HDSL 24 Hours UAS (Unavailable Seconds)	The number of seconds the HDSL loop was out-of-sync.
DS1 BPV Seconds (ES)	The number of seconds in which at least 1 BPV was detected on the T1 input.
DS1 UAS Count	The number of seconds during which the T1 input signal was absent (125 or more consecutive “0”).
Frame Type	Type of T1 framing used on the input stream (SF, ESF, Unframed or No Activity).
Code Type	Type of T1 line coding used (AMI, B8ZS, AMI : ZBTSI or B8ZS : ZBTSI). The latter two conditions indicate the line code that is being received when the HiGain system is set to its ZBTSI mode. In either the AMI or the B8ZS conditions, the code type displays the user-selected code, as opposed to the type of code that is actually being received. (The user-selected code is displayed when set to Auto mode.)
HLU/Ver w.x-y	“w.x” = software version number of the HLU-388, List 2D. “y” = list number of HLU-388, List 2D.
HRU/Ver a.b-c	“a.b” = software version number of the HRU-412. “c” = list number of HRU-412.
HDU1/Ver s.t-u	“s.t.” = software version number of the HDU-451 #1. “u” = list number of the HDU-451 #1.
HDU2/Ver f.g-h	“f.g.” = software version number of the HDU-451 #2. “h” = list number of the HDU-451 #2.

TABLE 20. HLU-388, LIST 2D FOUR-CHARACTER FRONT PANEL MESSAGES

Message	*Full Name*	*Description*
CREM	Customer Remote Loopback	Signal from customer is looped back to customer at HLU-388.
NLOC	Network Local Loopback	DSX-1 signal is looped back to DSX-1 at HLU.
CLOC	Customer Local Loopback	Signal from customer is looped back to customer at HRU-412.
NREM	Network Remote Loopback	DSX-1 signal is looped back to DSX-1 at HRU.
SMJK	Remote Smart-Jack Loopback	DSX-1 signal is looped back to DSX-1 at HRU.
TLOS	Transmit Loss Of Signal	HRU is in a logic loopback state caused by a loss of its DS1 input from the CI, if ENAbled at the HRU via its TLOS switch option.
FERR	Framing Bit Error occurred	Framing bit error occurred at HLU DSX-1 input.
LBPV	Local Bipolar Violation	A bipolar violation has been received at the DSX-1 input to the HLU-388.
SIG1	Signal 1	The HLU and the first doubler transceivers are trying to establish contact with each other on loop 1 of span 1.
SIG2	Signal 2	The HLU and the first doubler transceivers are trying to establish contact with each other on loop 2 of span 1.
S2L1	Signal 2 Loop 1	The first doubler is trying to establish contact with either the HRU or the second doubler transceivers on loop 1 of span 2.
S2L2	Signal 2 Loop 2	The first doubler is trying to establish contact with either the HRU or the second doubler transceivers on loop 2 of span 2.
S3L1	Signal 3 Loop 1	The second doubler and HRU transceivers are trying to establish contact with each other on loop 1 of span 3.
S3L2	Signal 3 Loop 2	The second doubler and HRU transceivers are trying to establish contact with each other on loop 2 of span 3.
ACQ1	Acquisition 1	The HLU and the first doubler multiplexers are trying to establish synchronization over loop 1 of span 1
ACQ2	Acquisition 2	The HLU and the first doubler multiplexers are trying to establish synchronization over loop 2 of span 1

Table continued on next page

TABLE 20. HLU-388, LIST 2D FOUR-CHARACTER FRONT PANEL MESSAGES (CONTINUED)

Message	*Full Name*	*Description*
A2L1	Acquisition 2 Loop 1	The first doubler is trying to establish synchronization with either the HRU or the second doubler multiplexers on loop 1 of span 2.
A2L2	Acquisition 2 Loop 2	The first doubler is trying to establish synchronization with either the HRU or the second doubler multiplexers on loop 2 of span 2.
A3L1	Acquisition 3 Loop 1	The second doubler and HRU multiplexers are trying to establish synchronization with each other on loop 1 of span 3.
A3L2	Acquisition 3 Loop 2	The second doubler and HRU multiplexers are trying to establish synchronization with each other on loop 2 of span 3.
H1ES	HDSL CRC Error Channel 1	HLU HDSL loop 1 CRC error.
H2ES	HDSL CRC Error Channel 2	HLU HDSL loop 2 CRC error.
ARM	HiGain System is Armed	Armed and ready to respond to Intelligent Repeater loop codes.
ACO	Alarm CutOff	A minor alarm occurred and was retired to an ACO condition after pressing the SEL button on the HLU front panel.
SELF-TEST	Self-test	The HLU is in a self-test mode. This occurs every power On/Off cycle.
ALRM	Alarm condition exists	A minor alarm condition is in effect.
1 = xx	HDSL Loop 1 Margin	Indicates the power of the received HDSL signal on loop 1 relative to noise. Any value of “06” or greater is adequate for reliable system operation.
2 = yy	HDSL Loop 2 Margin	Indicates the power of the received HDSL signal on loop 2 relative to noise. Any value of “06” or greater is adequate for reliable system operation.
PWR FEED SHRT	Power Feed Short	Indicates a short between the two HDSL pairs in Span 1. This same message can occur with an HRU which is drawing the correct amount of power over good cable pairs, but can not communicate with the HLU.
PWR FEED OPEN	Power Feed Open	Indicates an open circuit in the T and R of either HDSL pair in Span 1.
PWR FEED OFF	Power Feed Off	HDSL span power has been turned off by setting the PWFD option to DIS.

Table continued on next page

TABLE 20. HLU-388, LIST 2D FOUR-CHARACTER FRONT PANEL MESSAGES (CONTINUED)

Message	*Full Name*	*Description*
BAD RT?	No response from HRU	The HLU does not receive any response from the HRU. Thus, the HRU's integrity is questionable.
VER XXXX	HLU software Version number	This is displayed during the System Settings review mode. Depress the **Mode** button for 3 seconds.
LIST XXXX	HLU's List number	Displayed during System Settings review mode defined above.
FRM	Frame: SF, ESF, UNFR, None	Defines the type of frame pattern being received from the DSX-1. Displayed during System Settings mode defined above.
LOSW	Loss of Sync Word	Indicates that one of the HDSL loops has lost sync. Causes a minor alarm.
LLOS	Local Loss of Signal	Indicates that no signal is detected at the DSX-1 input to the HLU. Causes a minor alarm.
RLOS	Remote Loss of Signal	Indicates that no signal is detected at the DS1 input to the HRU. Causes a minor alarm.
DS1	DS1 BPV Errors	Indicates that the number of BPVs at the HLU or HRU T1 inputs have exceeded the 24-hour ES threshold. Causes a minor alarm.
DS0	DS0 Blocked Channels	Indicates status of DS0 blocked channels. "None" indicates no channels are blocked. BLK indicates some channels are blocked.
MAL1	Margin Alarm Loop 1	The margin on HDSL loop 1 has dropped below the threshold (0 to 15 dB) set by the user.
MAL2	Margin Alarm Loop 2	The margin on HDSL loop 2 has dropped below the threshold (0 to 15 dB) set by the user.
MNGD	Managed	The HLU-388, List 2D is under control of the HMU-319 network management unit. In this state, the RS-232 maintenance port on the HLU-388's front panel is inoperative.

```
HI-GAIN HLU 388     MAINTENANCE TERMINAL MAIN MENU   (ver V3.0L-002D)
                         CIRCUIT ID#:

                    A. VIEW SPAN STATUS
                    B. SET CLOCK
                    C. SYSTEM SETTINGS
                    D. LOOPBACK MODE:  NONE
                    E. VIEW PERFORMANCE DATA
                    F. VIEW PERFORMANCE HISTORY
                    G. VIEW ALARM HISTORY
                    H. ENTER CIRCUIT ID #
```

Figure 16. HLU-388, List 2D Main Menu.

```
                              SPAN 1 STATUS
                    ( HLU/ver3.0-002D:HDU1/ver2.0-0003)
TIME: 00:49:03
DATE: 05/02/96                        CIRCUIT ID#:

ALARMS:   LAIS RAIS LLOS RLOS
LOOPBACK: OFF
                          HLU                          HDU1
                    HDSL-1       HDSL-2       HDSL-1       HDSL-2
                 cur/min/max  cur/min/max  cur/min/max  cur/min/max
MARGIN:            13/12/14     13/07/13     13/00/14     13/00/13 dB
PULSE ATTN:           28           28           28           28    dB
PPM OFFSET:           00           00          -18          -18    ppm
24 HOUR ES:        00003        00003        00003        00002  seconds
24 HOUR UAS:       01663        01666        00013        00016  seconds

                                   DS1 STATUS
                               HLU                  HRU
24 HOUR BPV Seconds:         00415                00006
24 HOUR UAS Count:           01209                01469
Frame type:               No Activity          No Activity
Code type:                   B8ZS                 B8ZS

                          (E)xit (C)lear (U)pdate (S)pan
```

Figure 17. HLU-388, List 2D Status Display - Span 1 (1 or 2 Doublers).

```
                              SPAN 2 STATUS
                   (HDU1/ver1.7-00FF: HRU/ver1.6-0006)
TIME: 00:38:57
DATE: 05/18/95                    CIRCUIT ID#:

ALARMS:   NONE
LOOPBACK: OFF
                        HDU1                          HRU
                 HDSL-1       HDSL-2       HDSL-1       HDSL-2
              cur/min/max  cur/min/max  cur/min/max  cur/min/max
MARGIN:         22/00/22     21/00/22     22/21/23     22/20/23 dB
PULSE ATTN:        01           01           01           01    dB
PPM OFFSET:        00           00           13           14    ppm
24 HOUR ES:       00001        00003        00012        00010  seconds
24 HOUR UAS:      00006        00020        00053        00011  seconds

                                  DS1 STATUS
                              HLU                  HRU
24 HOUR BPV Seconds:         00006                00015
24 HOUR UAS Count:           00218                00130
Frame type:                 Unframed             Unframed
Code type:                    AMI                  AMI

                         (E)xit (C)lear (U)pdate (S)pan
```

Figure 18. HLU-388, List 2D Status Display - Span 2 (1 Doubler).

```
                              SPAN 2 STATUS
                   (HDU1/ver1.7-00FF:HDU2/ver1.6-00FF)
TIME: 01:08:03
DATE: 05/18/95                    CIRCUIT ID#:

ALARMS:   LAIS
LOOPBACK: OFF
                        HDU1                          HDU2
                 HDSL-1       HDSL-2       HDSL-1       HDSL-2
              cur/min/max  cur/min/max  cur/min/max  cur/min/max
MARGIN:         22/00/22     21/00/22     22/00/22     22/00/22 dB
PULSE ATTN:        00           00           00           01    dB
PPM OFFSET:        00           00           09           09    ppm
24 HOUR ES:       00002        00005        00001        00000  seconds
24 HOUR UAS:      00014        00030        00003        00005  seconds

                                  DS1 STATUS
                              HLU                  HRU
24 HOUR BPV Seconds:         00049                00049
24 HOUR UAS Count:           00277                00325
Frame type:                 Unframed           No Activity
Code type:                    AMI                  AMI

                         (E)xit (C)lear (U)pdate (S)pan
```

Figure 19. HLU-388, List 2D Status Display - Span 2 (2 Doublers).

```
                              SPAN 3 STATUS
                  (HDU2/ver1.6-00FF: HRU/ver1.4-0007)
TIME: 01:09:27
DATE: 05/18/95                    CIRCUIT ID#:

ALARMS:   CHREV LAIS RLOS
LOOPBACK: OFF
                        HDU2                          HRU
                 HDSL-1       HDSL-2       HDSL-1       HDSL-2
              cur/min/max  cur/min/max  cur/min/max  cur/min/max
MARGIN:         09/00/11     10/00/12     19/18/20     20/18/21 dB
PULSE ATTN:        06           06           03           03    dB
PPM OFFSET:        00           00          -04          -04    ppm
24 HOUR ES:       00276        00273        00289        00284  seconds
24 HOUR UAS:      00005        00008        00058        00014  seconds

                                  DS1 STATUS
                             HLU                 HRU
24 HOUR BPV Seconds:        00066               00060
24 HOUR UAS Count:          00300               00409
Frame type:                Unframed          No Activity
Code type:                   AMI                 AMI

                        (E)xit (C)lear (U)pdate (S)pan
```

Figure 20. HLU-388, List 2D Status Display - Span 3 (2 Doublers).

```
                              SET CLOCK

    TIME: 00:41:02
    DATE: 05/18/95
    CIRCUIT ID#:


    Format: HH:MM
            MM/DD/YY






    NEW TIME:

    NEW DATE:



    (U)PDATE REMOTE?
```

Figure 21. HLU-388, List 2D Set Clock Menu.

```
                              SYSTEM SETTINGS

TIME: 00:50:41
DATE: 05/02/96                    CIRCUIT ID#:

E(Q)UALIZATION:     0
SMART-JACK (L)B:    ENABLE
(S)PECIAL LPBK:     GNLB
(P)OWER:            ENABLE
(Z)BTSI:            OFF
ES ALARM TH(R)ES:   NONE
LOOPBACK (T)IMEOUT: 60
(A)LARM:            DISABLE
(D)S1 LINE CODE:    B8ZS
(F)RAMING:          AUTO
AIS ON (H)DSL LOSW: 2 LOOPS
AIS ON S(M)JK/NREM: ENABLE
MAR(G)IN ALM THRES: 0
DS0 (B)LOCKING: xx - Blocked Channels
01 02 03 04 05 06 07 08 09 10 11 12 13 14 15 16 17 18 19 20 21 22 23 24

                              (E)xit
     Enter the letter in parenthesis (X) to change any setting
```

Figure 22. HLU-388, List 2D System Settings Menu.

```
                              LOOPBACK MENU

TIME: 00:44:41
DATE: 05/18/95
CIRCUIT ID#:


                        A. DISABLE LOOPBACKS
                        B. NETWORK LOOP HLU          (NLOC)
                        C. NETWORK LOOP HRU          (NREM)
                        D. NETWORK LOOP DOUBLER 1    (NDU1)
                        G. CUSTOMER LOOP HLU         (CREM)
                        H. CUSTOMER LOOP HRU         (CLOC)
                        I. CUSTOMER LOOP DOUBLER 1   (CDU1)









                              (E)xit
```

Figure 23. HLU-388, List 2D Doubler Loopback Menu.

```
Date: 05/18/95        SPAN 1 PERFORMANCE DATA
CIRCUIT ID#:
                  ERRORED SECONDS/UNAVAILABLE SECONDS

                DS1              HDSL-1            HDSL-2
           HLU      HRU      HLU      HDU1      HLU      HDU1
21:00    000/000  000/000  000/000  000/000  000/000  000/000
21:15    000/000  000/000  000/000  000/000  000/000  000/000
21:30    000/000  000/000  000/000  000/000  000/000  000/000
21:45    000/000  000/000  000/000  000/000  000/000  000/000
22:00    000/000  000/000  000/000  000/000  000/000  000/000
22:15    000/000  000/000  000/000  000/000  000/000  000/000
22:30    000/000  000/000  000/000  000/000  000/000  000/000
22:45    000/000  000/000  000/000  000/000  000/000  000/000
23:00    000/000  000/000  000/000  000/000  000/000  000/000
23:15    000/000  000/000  000/000  000/000  000/000  000/000
23:30    000/000  000/000  000/000  000/000  000/000  000/000
23:45    000/000  000/000  000/000  000/000  000/000  000/000
00:00    000/000  000/000  000/000  000/000  000/000  000/000
00:15    002/214  009/125  005/063  005/008  003/064  001/009
00:30    003/001  002/001  001/037  000/000  001/035  000/000
00:45    001/003  004/004  002/024  002/004  001/025  000/004

                        (E)xit (P)revious (N)ext (S)pan
```

Figure 24. HLU-388, List 2D Performance Data Screen - Span 1 (1 or 2 Doublers).

```
Date: 05/18/95        SPAN 2 PERFORMANCE DATA
CIRCUIT ID#:
                  ERRORED SECONDS/UNAVAILABLE SECONDS

                DS1              HDSL-1            HDSL-2
           HLU      HRU      HDU1      HRU      HDU1      HRU
21:00    000/000  000/000  000/000  000/000  000/000  000/000
21:15    000/000  000/000  000/000  000/000  000/000  000/000
21:30    000/000  000/000  000/000  000/000  000/000  000/000
21:45    000/000  000/000  000/000  000/000  000/000  000/000
22:00    000/000  000/000  000/000  000/000  000/000  000/000
22:15    000/000  000/000  000/000  000/000  000/000  000/000
22:30    000/000  000/000  000/000  000/000  000/000  000/000
22:45    000/000  000/000  000/000  000/000  000/000  000/000
23:00    000/000  000/000  000/000  000/000  000/000  000/000
23:15    000/000  000/000  000/000  000/000  000/000  000/000
23:30    000/000  000/000  000/000  000/000  000/000  000/000
23:45    000/000  000/000  000/000  000/000  000/000  000/000
00:00    000/000  000/000  000/000  000/000  000/000  000/000
00:15    002/214  009/125  001/002  006/046  002/017  006/005
00:30    003/001  002/001  000/000  002/005  000/000  002/004
00:45    001/003  004/004  000/004  004/002  001/003  002/002

                        (E)xit (P)revious (N)ext (S)pan
```

Figure 25. HLU-388, List 2D Performance Data Screen - Span 2 (1 Doubler).

```
Date: 05/18/95        SPAN 2 PERFORMANCE DATA
CIRCUIT ID#:
                  ERRORED SECONDS/UNAVAILABLE SECONDS

                DS1              HDSL-1            HDSL-2
           HLU      HRU      HDU1     HDU2     HDU1     HDU2
21:15    000/000  000/000  000/000  000/000  000/000  000/000
21:30    000/000  000/000  000/000  000/000  000/000  000/000
21:45    000/000  000/000  000/000  000/000  000/000  000/000
22:00    000/000  000/000  000/000  000/000  000/000  000/000
22:15    000/000  000/000  000/000  000/000  000/000  000/000
22:30    000/000  000/000  000/000  000/000  000/000  000/000
22:45    000/000  000/000  000/000  000/000  000/000  000/000
23:00    000/000  000/000  000/000  000/000  000/000  000/000
23:15    000/000  000/000  000/000  000/000  000/000  000/000
23:30    000/000  000/000  000/000  000/000  000/000  000/000
23:45    000/000  000/000  000/000  000/000  000/000  000/000
00:00    000/000  000/000  000/000  000/000  000/000  000/000
00:15    002/214  009/125  001/002  000/000  002/017  000/000
00:30    003/001  002/001  000/000  000/000  000/000  000/000
00:45    001/003  004/004  000/004  000/000  001/003  000/000
01:00    000/000  000/000  000/000  000/000  000/000  000/000

                      (E)xit (P)revious (N)ext (S)pan
```

Figure 26. HLU-388, List 2D Performance Data Screen - Span 2 (2 Doublers).

```
Date: 05/18/95        SPAN 3 PERFORMANCE DATA
CIRCUIT ID#:
                  ERRORED SECONDS/UNAVAILABLE SECONDS

                DS1              HDSL-1            HDSL-2
           HLU      HRU      HDU2     HRU      HDU2     HRU
21:15    000/000  000/000  000/000  000/000  000/000  000/000
21:30    000/000  000/000  000/000  000/000  000/000  000/000
21:45    000/000  000/000  000/000  000/000  000/000  000/000
22:00    000/000  000/000  000/000  000/000  000/000  000/000
22:15    000/000  000/000  000/000  000/000  000/000  000/000
22:30    000/000  000/000  000/000  000/000  000/000  000/000
22:45    000/000  000/000  000/000  000/000  000/000  000/000
23:00    000/000  000/000  000/000  000/000  000/000  000/000
23:15    000/000  000/000  000/000  000/000  000/000  000/000
23:30    000/000  000/000  000/000  000/000  000/000  000/000
23:45    000/000  000/000  000/000  000/000  000/000  000/000
00:00    000/000  000/000  000/000  000/000  000/000  000/000
00:15    002/214  009/125  000/000  006/046  000/000  006/005
00:30    003/001  002/001  000/000  002/005  000/000  002/004
00:45    001/003  004/004  000/000  004/002  000/000  002/002
01:00    000/000  000/000  000/000  000/000  000/000  000/000

                      (E)xit (P)revious (N)ext (S)pan
```

Figure 27. HLU-388, List 2D Performance Data Screen - Span 3 (2 Doublers).

```
Time: 00:50:56                    7 DAY HISTORY
CIRCUIT ID#:

                                    SPAN 1
                        ERRORED SECONDS/UNAVAILABLE SECONDS

                 DS1                   HDSL-1                  HDSL-2
            HLU         HRU         HLU         HDU1         HLU         HDU1
05/11   00000/00000 00000/00000 00000/00000 00000/00000 00000/00000 00000/00000
05/12   00000/00000 00000/00000 00000/00000 00000/00000 00000/00000 00000/00000
05/13   00000/00000 00000/00000 00000/00000 00000/00000 00000/00000 00000/00000
05/14   00000/00000 00000/00000 00000/00000 00000/00000 00000/00000 00000/00000
05/15   00000/00000 00000/00000 00000/00000 00000/00000 00000/00000 00000/00000
05/16   00000/00000 00000/00000 00000/00000 00000/00000 00000/00000 00000/00000
05/17   00000/00000 00000/00000 00000/00000 00000/00000 00000/00000 00000/00000
current 00006/00218 00015/00130 00008/00124 00007/00012 00005/00124 00001/00013

                                   (E)xit (S)pan
```

Figure 28. HLU-388, List 2D 7-Day Performance History Screen - Span 1 (1 or 2 Doublers).

```
Time: 00:52:38                    7 DAY HISTORY
CIRCUIT ID#:

                                    SPAN 2
                        ERRORED SECONDS/UNAVAILABLE SECONDS

                 DS1                   HDSL-1                  HDSL-2
            HLU         HRU         HDU1         HRU         HDU1         HRU
05/11   00000/00000 00000/00000 00000/00000 00000/00000 00000/00000 00000/00000
05/12   00000/00000 00000/00000 00000/00000 00000/00000 00000/00000 00000/00000
05/13   00000/00000 00000/00000 00000/00000 00000/00000 00000/00000 00000/00000
05/14   00000/00000 00000/00000 00000/00000 00000/00000 00000/00000 00000/00000
05/15   00000/00000 00000/00000 00000/00000 00000/00000 00000/00000 00000/00000
05/16   00000/00000 00000/00000 00000/00000 00000/00000 00000/00000 00000/00000
05/17   00000/00000 00000/00000 00000/00000 00000/00000 00000/00000 00000/00000
current 00006/00218 00015/00130 00001/00006 00012/00053 00003/00020 00010/00011

                                   (E)xit (S)pan
```

Figure 29. HLU-388, List 2D 7-Day Performance History Screen - Span 2 (1 Doubler).

```
Time: 01:14:17                    7 DAY HISTORY
CIRCUIT ID#:

                                    SPAN 2
                        ERRORED SECONDS/UNAVAILABLE SECONDS

                 DS1                    HDSL-1                  HDSL-2
            HLU         HRU        HDU1        HDU2        HDU1        HDU2
05/11   00000/00000 00000/00000 00000/00000 00000/00000 00000/00000 00000/00000
05/12   00000/00000 00000/00000 00000/00000 00000/00000 00000/00000 00000/00000
05/13   00000/00000 00000/00000 00000/00000 00000/00000 00000/00000 00000/00000
05/14   00000/00000 00000/00000 00000/00000 00000/00000 00000/00000 00000/00000
05/15   00000/00000 00000/00000 00000/00000 00000/00000 00000/00000 00000/00000
05/16   00000/00000 00000/00000 00000/00000 00000/00000 00000/00000 00000/00000
05/17   00000/00000 00000/00000 00000/00000 00000/00000 00000/00000 00000/00000
current 00006/00218 00015/00130 00001/00006 00000/00000 00003/00020 00000/00000

                                    (E)xit (S)pan
```

Figure 30. HLU-388, List 2D 7-Day Performance History Screen - Span 2 (2 Doublers).

```
Time: 01:16:09                    7 DAY HISTORY
CIRCUIT ID#:

                                    SPAN 3
                        ERRORED SECONDS/UNAVAILABLE SECONDS

                 DS1                    HDSL-1                  HDSL-2
            HLU         HRU        HDU2        HRU        HDU2        HRU
05/11   00000/00000 00000/00000 00000/00000 00000/00000 00000/00000 00000/00000
05/12   00000/00000 00000/00000 00000/00000 00000/00000 00000/00000 00000/00000
05/13   00000/00000 00000/00000 00000/00000 00000/00000 00000/00000 00000/00000
05/14   00000/00000 00000/00000 00000/00000 00000/00000 00000/00000 00000/00000
05/15   00000/00000 00000/00000 00000/00000 00000/00000 00000/00000 00000/00000
05/16   00000/00000 00000/00000 00000/00000 00000/00000 00000/00000 00000/00000
05/17   00000/00000 00000/00000 00000/00000 00000/00000 00000/00000 00000/00000
current 00144/00392 00117/00739 00607/00007 00620/00058 00604/00017 00622/00018

                                    (E)xit (S)pan
```

Figure 31. HLU-388, List 2D 7-Day Performance History Screen - Span 3 (2 Doublers).

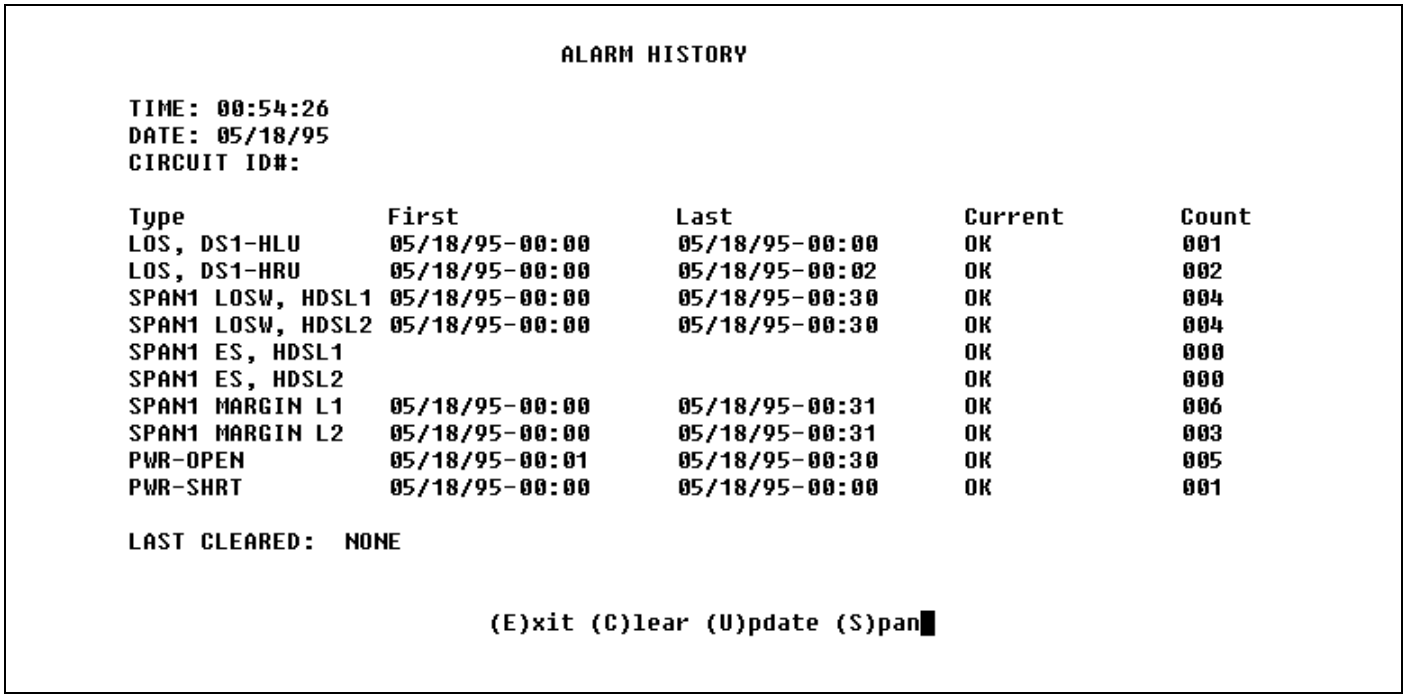

Figure 32. HLU-388, List 2D Alarm History Screen - Span 1 (1 or 2 Doublers).

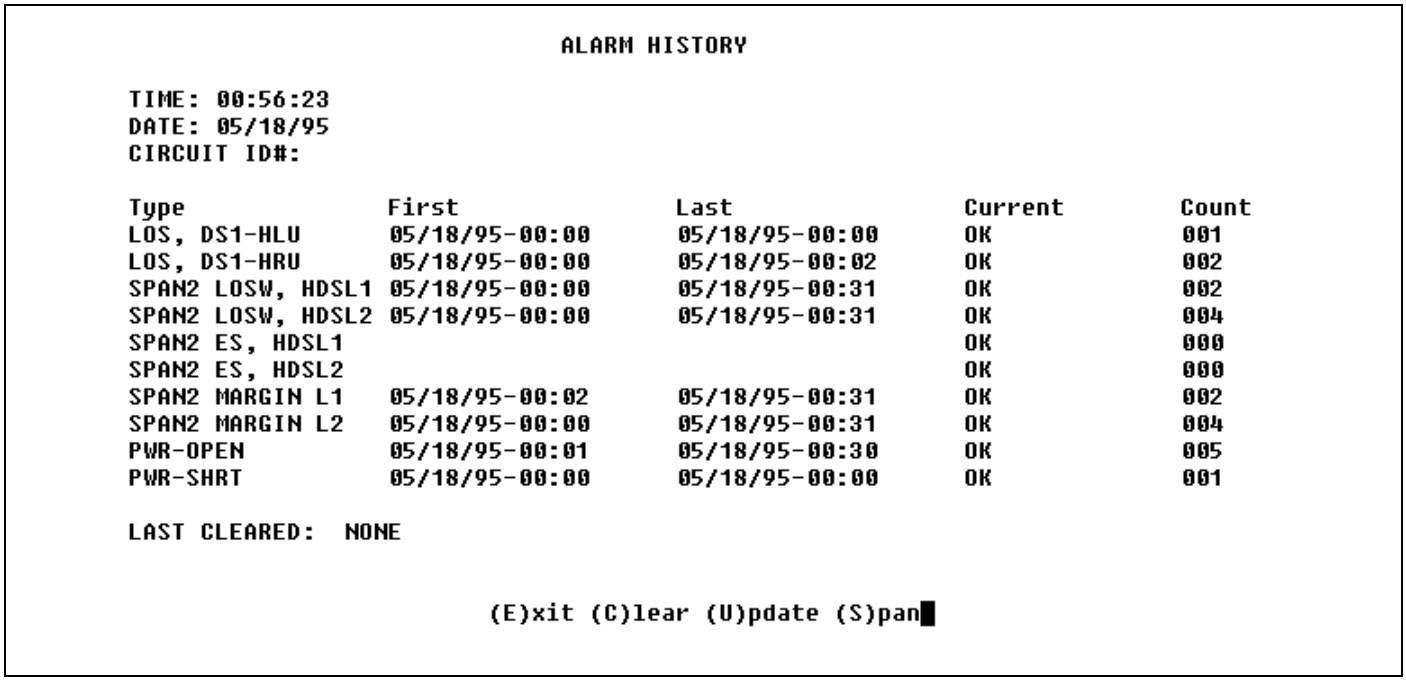

Figure 33. HLU-388, List 2D Alarm History Screen - Span 2 (1 or 2 Doublers).

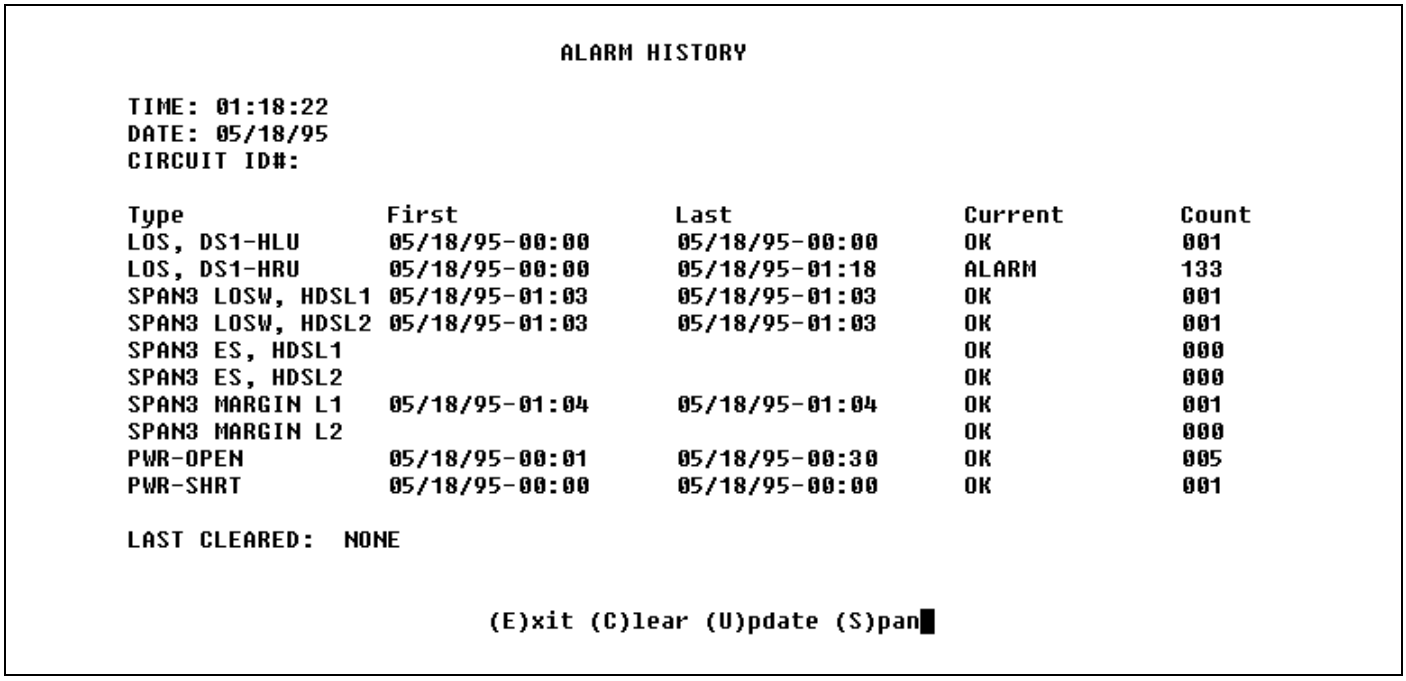

```
                              ALARM HISTORY

      TIME: 01:18:22
      DATE: 05/18/95
      CIRCUIT ID#:

      Type              First               Last                Current        Count
      LOS, DS1-HLU      05/18/95-00:00      05/18/95-00:00      OK             001
      LOS, DS1-HRU      05/18/95-00:00      05/18/95-01:18      ALARM          133
      SPAN3 LOSW, HDSL1 05/18/95-01:03      05/18/95-01:03      OK             001
      SPAN3 LOSW, HDSL2 05/18/95-01:03      05/18/95-01:03      OK             001
      SPAN3 ES, HDSL1                                           OK             000
      SPAN3 ES, HDSL2                                           OK             000
      SPAN3 MARGIN L1   05/18/95-01:04      05/18/95-01:04      OK             001
      SPAN3 MARGIN L2                                           OK             000
      PWR-OPEN          05/18/95-00:01      05/18/95-00:30      OK             005
      PWR-SHRT          05/18/95-00:00      05/18/95-00:00      OK             001

      LAST CLEARED:  NONE


                           (E)xit (C)lear (U)pdate (S)pan
```

Figure 34. HLU-388, List 2D Alarm History Screen - Span 3 (2 Doublers).

Copyright © 1996, PairGain Technologies, Inc. PairGain is a registered trademark, CopperOptics and HiGain are trademarks of PairGain Technologies, Inc.