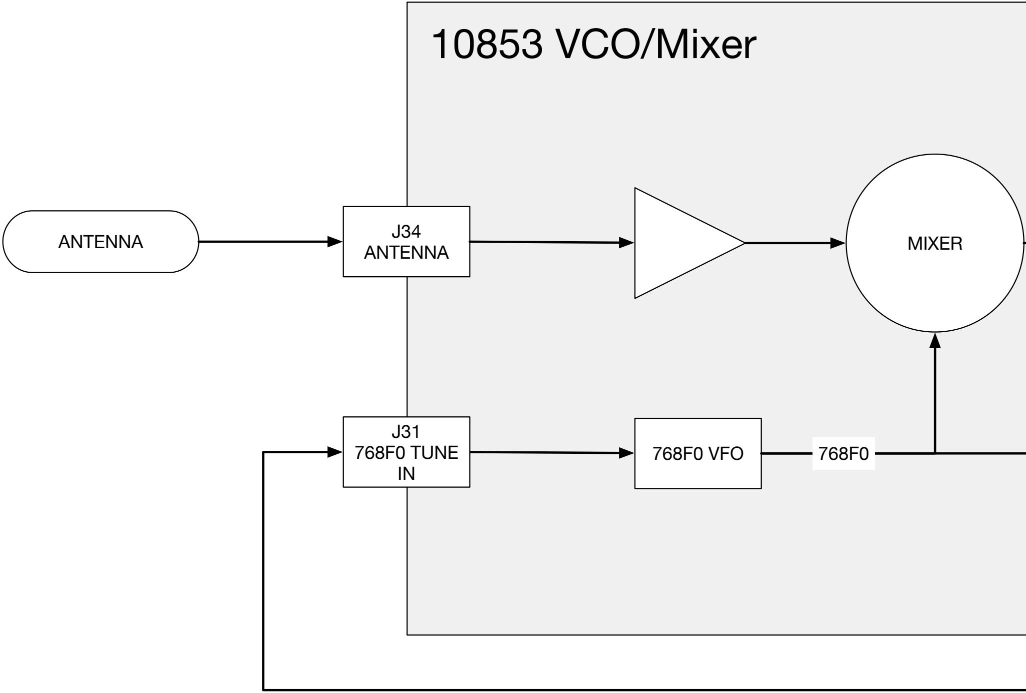
10853 VCO/Mixer
ANTENNA
J34
ANTENNA
MIXER
J31
768F0 TUNE
IN
768F0 VFO
768F0

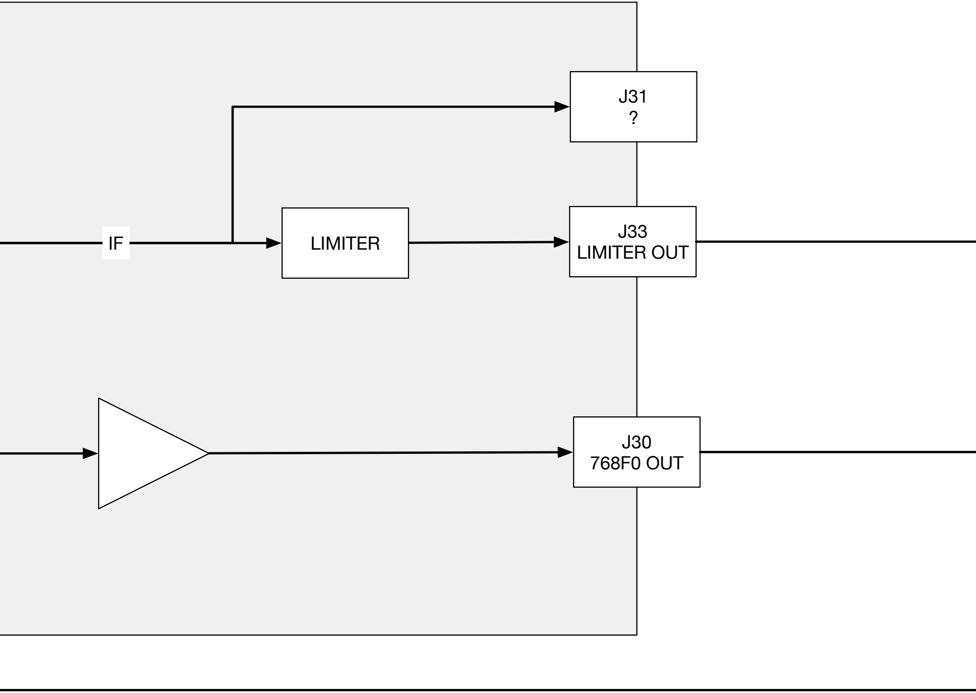
J31
?
IF
LIMITER
J33
LIMITER OUT
J30
768F0 OUT

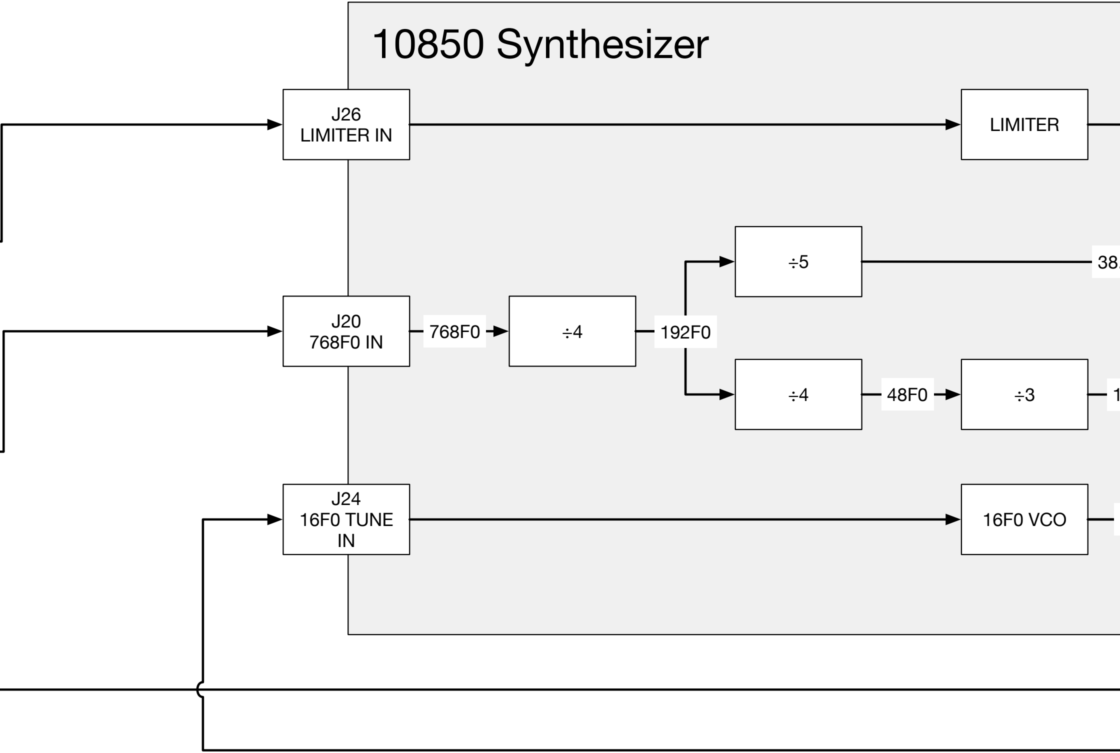
10850 Synthesizer
J26
LIMITER IN
LIMITER
÷5
38
J20
768F0 IN
768F0
÷4
192F0
÷4
48F0
÷3
1
J24
16F0 TUNE
IN
16F0 VCO

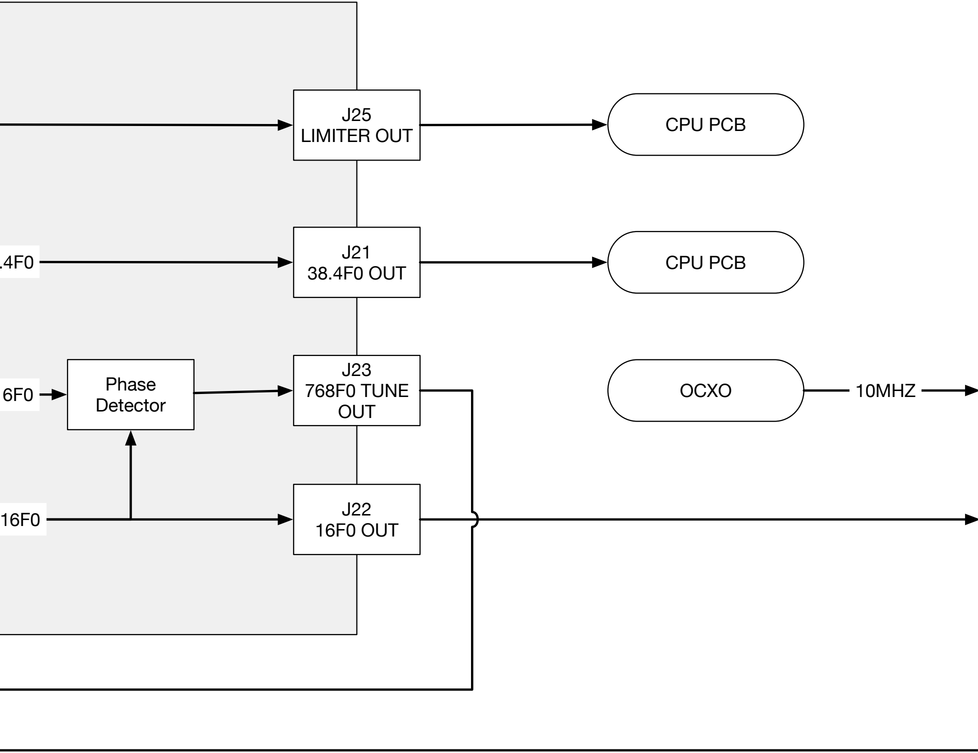
J25
LIMITER OUT
CPU PCB
.4F0
J21
38.4F0 OUT
CPU PCB
6F0
Phase
Detector
J23
768F0 TUNE
OUT
OCXO
10MHZ
16F0
J22
16F0 OUT

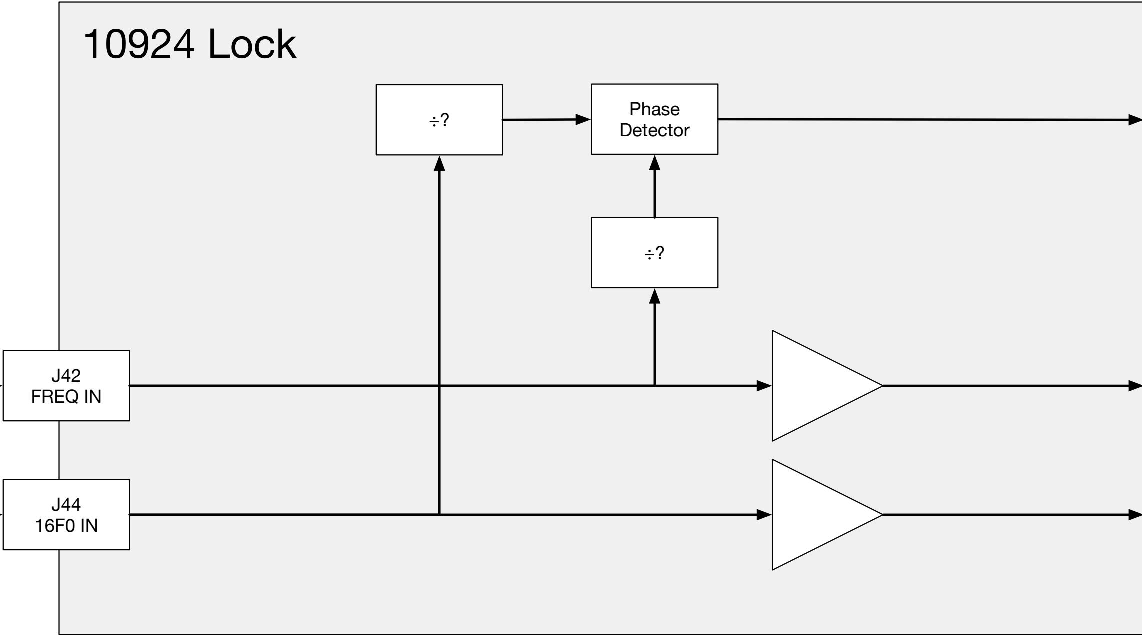
10924 Lock
÷?
Phase Detector
÷?
J42 FREQ IN
J44 16F0 IN

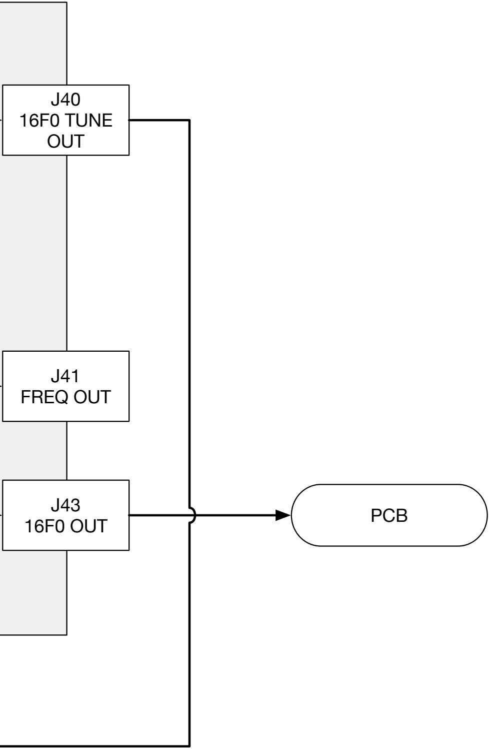
J40
16F0 TUNE OUT
J41
FREQ OUT
J43
16F0 OUT
PCB